东南大学

&

songmf@seu.edu.cn

-
-
-
-
-
-
-
-

$$
\begin{array}{ll}
\text{minimize} & f_0(x) \\
\text{subject to} & f_i(x) \leq 0, \quad i = 1, \ldots, m \\
& h_i(x) = 0, \quad i = 1, \ldots, p
\end{array}
$$

$$
\begin{array}{ll}
\text{minimize} & f_0(x) \\
\text{subject to} & f_i(x) \leq 0, \quad i = 1, \ldots, m \\
& h_i(x) = 0, \quad i = 1, \ldots, p
\end{array}
$$

- $x \in \mathbf{R}^n$

$$
\begin{array}{ll}
\text{minimize} & f_0(x) \\
\text{subject to} & f_i(x) \leq 0, \quad i = 1, \ldots, m \\
& h_i(x) = 0, \quad i = 1, \ldots, p
\end{array}
$$

- $x \in \mathbf{R}^n$
- $f_0 : \mathbf{R}^n \to \mathbf{R}$

$$
\begin{array}{ll}
\text{minimize} & f_0(x) \\
\text{subject to} & f_i(x) \leq 0, \quad i = 1, \ldots, m \\
& h_i(x) = 0, \quad i = 1, \ldots, p
\end{array}
$$

- $x \in \mathbf{R}^n$
- $f_0 : \mathbf{R}^n \to \mathbf{R}$
- $f_i : \mathbf{R}^n \to \mathbf{R}$, $i = 1, \ldots, m$

$$
\begin{array}{ll}
\text{minimize} & f_0(x) \\
\text{subject to} & f_i(x) \leq 0, \quad i = 1, \ldots, m \\
& h_i(x) = 0, \quad i = 1, \ldots, p
\end{array}
$$

- $x \in \mathbf{R}^n$
- $f_0 : \mathbf{R}^n \to \mathbf{R}$
- $f_i : \mathbf{R}^n \to \mathbf{R}$, $i = 1, \ldots, m$
- $h_i : \mathbf{R}^n \to \mathbf{R}$

$$
\begin{array}{ll}
\text{minimize} & f_0(x) \\
\text{subject to} & f_i(x) \leq 0, \quad i = 1, \ldots, m \\
& h_i(x) = 0, \quad i = 1, \ldots, p
\end{array}
$$

- $x \in \mathbf{R}^n$
- $f_0 : \mathbf{R}^n \to \mathbf{R}$
- $f_i : \mathbf{R}^n \to \mathbf{R}$, $i = 1, \ldots, m$
- $h_i : \mathbf{R}^n \to \mathbf{R}$
- $= p = 0$

-

- $$\mathcal{D} = \bigcap_{i=0}^{m} \mathbf{dom}\, f_i \;\cap\; \bigcap_{i=1}^{p} \mathbf{dom}\, h_i$$

- $$\mathcal{D} = \bigcap_{i=0}^{m} \mathbf{dom}\, f_i \;\cap\; \bigcap_{i=1}^{p} \mathbf{dom}\, h_i$$

- $$x \in \mathcal{D}$$

- $$\mathcal{D} = \bigcap_{i=0}^{m} \mathbf{dom}\, f_i \;\cap\; \bigcap_{i=1}^{p} \mathbf{dom}\, h_i$$

- $$\begin{aligned} & x \in \mathcal{D} \\ & f_i(x) \leq 0,\; i = 1, \ldots, m, \end{aligned}$$

- $$\mathcal{D} = \bigcap_{i=0}^{m} \mathbf{dom}\, f_i \;\cap\; \bigcap_{i=1}^{p} \mathbf{dom}\, h_i$$

- $$\begin{aligned} x &\in \mathcal{D} \\ f_i(x) &\leq 0,\ i = 1, \ldots, m, \\ h_i(x) &= 0,\ i = 1, \ldots, p. \end{aligned}$$

- $$\mathcal{D} = \bigcap_{i=0}^{m} \mathbf{dom}\, f_i \;\cap\; \bigcap_{i=1}^{p} \mathbf{dom}\, h_i$$

- $$\begin{aligned} x &\in \mathcal{D} \\ f_i(x) &\leq 0,\ i = 1, \ldots, m, \\ h_i(x) &= 0,\ i = 1, \ldots, p. \end{aligned}$$

-

- $$\mathcal{D} = \bigcap_{i=0}^{m} \mathbf{dom}\, f_i \;\cap\; \bigcap_{i=1}^{p} \mathbf{dom}\, h_i$$

- $$\begin{aligned} x &\in \mathcal{D} \\ f_i(x) &\leq 0,\ i = 1, \ldots, m, \\ h_i(x) &= 0,\ i = 1, \ldots, p. \end{aligned}$$

- $$p^\star = \inf\{f_0(x) \mid f_i(x) \leq 0,\ i = 1, \ldots, m,\ h_i(x) = 0,\ i = 1, \ldots, p\}$$

-

$$\mathcal{D} = \bigcap_{i=0}^{m} \mathbf{dom}\, f_i \ \cap \ \bigcap_{i=1}^{p} \mathbf{dom}\, h_i$$

- $$\begin{aligned} & x \in \mathcal{D} \\ & f_i(x) \leq 0, \ i = 1, \ldots, m, \\ & h_i(x) = 0, \ i = 1, \ldots, p \end{aligned}$$

-

$$p^\star = \inf\{ f_0(x) \mid f_i(x) \leq 0, \ i = 1, \ldots, m, \ h_i(x) = 0, \ i = 1, \ldots, p \}$$

  - x $p^\star = \infty$

-

$$\mathcal{D} = \bigcap_{i=0}^{m} \mathbf{dom}\, f_i \;\cap\; \bigcap_{i=1}^{p} \mathbf{dom}\, h_i$$

- $$\begin{aligned} x &\in \mathcal{D} \\ f_i(x) &\leq 0,\ i = 1, \ldots, m, \\ h_i(x) &= 0,\ i = 1, \ldots, p. \end{aligned}$$

-

$$p^\star = \inf\{f_0(x) \mid f_i(x) \leq 0,\ i = 1, \ldots, m,\ h_i(x) = 0,\ i = 1, \ldots, p\}$$

  - x $p^\star = \infty$
  - $p^\star = -\infty$

- x x $f_0(\cdot\,*) = p^*$

- x x $f_0(x^*) = p^*$
-

- x x $f_0(x^*) = p^*$
- $$X_{opt} = \{x \mid f_i(x) \le 0,\ i = 1, \ldots, m,\ h_i(x) = 0,$$
$$i = 1, \ldots, p,\ f_0(x) = p^\star\}$$

- x x $f_0(x^*) = p^*$
- $$X_{opt} = \{x \mid f_i(x) \le 0,\ i = 1, \ldots, m,\ h_i(x) = 0,$$
  $$i = 1, \ldots, p,\ f_0(x) = p^\star\}$$
- ϵ- $\epsilon > 0$

- x x $f_0(x^*) = p^*$
- $$X_{opt} = \{x \mid f_i(x) \le 0,\ i = 1, \ldots, m,\ h_i(x) = 0,$$
  $$i = 1, \ldots, p,\ f_0(x) = p^\star\}$$
- ϵ- $\epsilon > 0$

$$f_0(x) \le p^\star + \epsilon$$

- x R

- x R

$$
\begin{array}{ll}
\text{minimize} & f_0(z) \\
\text{subject to} & f_i(z) \le 0, \quad i = 1, \ldots, m \\
& h_i(z) = 0, \quad i = 1, \ldots, p \\
& \|z - x\|_2 \le R
\end{array}
$$

- x R

$$
\begin{array}{ll}
\text{minimize} & f_0(z) \\
\text{subject to} & f_i(z) \le 0, \quad i = 1, \ldots, m \\
& h_i(z) = 0, \quad i = 1, \ldots, p \\
& \|z - x\|_2 \le R
\end{array}
$$

(with $n = 1$, $m = p = 0$)

- x R

$$
\begin{array}{ll}
\text{minimize} & f_0(z) \\
\text{subject to} & f_i(z) \le 0, \quad i = 1, \ldots, m \\
& h_i(z) = 0, \quad i = 1, \ldots, p \\
& \|z - x\|_2 \le R
\end{array}
$$

(with $n = 1$, $m = p = 0$)

$f_0(x) = 1/x$, $\mathbf{dom}\, f_0 = \mathbf{R}_{++}$: $p^\star = 0$,

$f_0(x) = -\log x$, $\mathbf{dom}\, f_0 = \mathbf{R}_{++}$: $p^\star = -\infty$

$f_0(x) = x \log x$, $\mathbf{dom}\, f_0 = \mathbf{R}_{++}$: $p^\star = -1/e$, $x = 1/e$

$x^3 - 3x$, $p^\star = -\infty$, local opt $f_0(x) =$

- $f_i(x) \leq 0$

- $f_i(x) \leq 0$
- $f_i(x) < 0$

- $f_i(x) \leq 0$
- $f_i(x) < 0$

$$
\begin{array}{ll}
\text{minimize} & f_0(x) \\
\text{subject to} & f_i(x) \leq 0, \quad i = 1, \ldots, m \\
& h_i(x) = 0, \quad i = 1, \ldots, p
\end{array}
$$

- $f_i(x) \leq 0$
- $f_i(x) < 0$

$$
\begin{array}{lll}
\text{minimize} & f_0(x) & \\
\text{subject to} & \boxed{f_i(x) \leq 0,} & i = 1, \ldots, m \qquad \boxed{f_i(x) < 0} \\
& h_i(x) = 0, & i = 1, \ldots, p
\end{array}
$$

- $f_i(x) \leq 0$
- $f_i(x) < 0$

$$
\begin{array}{lll}
\text{minimize} & f_0(x) & \\
\text{subject to} & \boxed{f_i(x) \leq 0,} & i = 1, \ldots, m \qquad \boxed{f_i(x) < 0} \\
& h_i(x) = 0, & i = 1, \ldots, p
\end{array}
$$

$f(\cdot) < 100$

- $f_i(x) \leq 0$
- $f_i(x) < 0$

$$
\begin{array}{lll}
\text{minimize} & f_0(x) & \\
\text{subject to} & \boxed{f_i(x) \leq 0,} \quad i = 1, \ldots, m & \boxed{f_i(x) < 0} \\
& h_i(x) = 0, \quad i = 1, \ldots, p &
\end{array}
$$

$f(\cdot) < 100$

$f(\cdot) \leq 100$

- $f_i(x) \leq 0$
- $f_i(x) < 0$

$$
\begin{array}{ll}
\text{minimize} & f_0(x) \\
\text{subject to} & \boxed{f_i(x) \leq 0,} \quad i = 1, \ldots, m \qquad \boxed{f_i(x) < 0} \\
& h_i(x) = 0, \quad i = 1, \ldots, p
\end{array}
$$

$f(\cdot) < 100$

$f(\cdot) \leq 100$

$-|\log(100 - \cdot)| \leq 0$

$$
\begin{array}{ll}
\text{find} & x \\
\text{subject to} & f_i(x) \leq 0, \quad i = 1, \ldots, m \\
& h_i(x) = 0, \quad i = 1, \ldots, p.
\end{array}
$$

-

- $$\text{minimize} \quad f_0(x)$$
$$u_i, \quad i = 1, \ldots, n, \quad \text{subject to} \quad l_i \leq x_i \leq$$

$$\begin{array}{ll} \text{minimize} & f_0(x) \\ \text{subject to} & l_i \leq x_i \leq u_i, \quad i = 1, \ldots, n \end{array}$$

$$\begin{array}{ll} \text{minimize} & f_0(x) \\ \text{subject to} & l_i - x_i \leq 0, \quad i = 1, \ldots, n \\ & x_i - u_i \leq 0, \quad i = 1, \ldots, n. \end{array}$$

$$
\begin{array}{ll}
\text{minimize} & f_0(x) \\
\text{subject to} & f_i(x) \leq 0, \quad i = 1, \ldots, m \\
& h_i(x) = 0, \quad i = 1, \ldots, p
\end{array}
$$

$$
\begin{array}{ll}
\text{minimize} & f_0(x) \\
\text{subject to} & f_i(x) \le 0, \quad i = 1, \ldots, m \\
& h_i(x) = 0, \quad i = 1, \ldots, p
\end{array}
$$

$$
\begin{array}{ll}
\text{minimize} & \tilde{f}(x) = \alpha_0 f_0(x) \\
\text{subject to} & \tilde{f}_i(x) = \alpha_i f_i(x) \le 0, \quad i = 1, \ldots, m \\
& \tilde{h}_i(x) = \beta_i h_i(x) = 0, \quad i = 1, \ldots, p,
\end{array}
$$

- $\psi_0 : \mathbf{R} \to \mathbf{R}$

- $\psi_0 : \mathbf{R} \to \mathbf{R}$
  $\psi_1, \ldots, \psi_m : \mathbf{R} \to \mathbf{R}$

- $\psi_0 : \mathbf{R} \to \mathbf{R}$
  $\psi_1, \ldots, \psi_m : \mathbf{R} \to \mathbf{R}$ $\qquad \psi_i(u) \leq 0 \leftrightarrow u \leq 0$

- $\psi_0 : \mathbf{R} \to \mathbf{R}$
  $\psi_1, \ldots, \psi_m : \mathbf{R} \to \mathbf{R}$ $\qquad \psi_i(u) \leq 0 \leftrightarrow u \leq 0$
  $\psi_{m+1}, \ldots, \psi_{m+p} : \mathbf{R} \to \mathbf{R}$

- $\psi_0 : \mathbf{R} \to \mathbf{R}$

  $\psi_1, \ldots, \psi_m : \mathbf{R} \to \mathbf{R} \qquad \psi_i(u) \leq 0 \leftrightarrow u \leq 0$

  $\psi_{m+1}, \ldots, \psi_{m+p} : \mathbf{R} \to \mathbf{R} \quad \psi_i(u) = 0 \leftrightarrow u = 0$

- $\psi_0 : \mathbf{R} \to \mathbf{R}$

  $\psi_1, \ldots, \psi_m : \mathbf{R} \to \mathbf{R} \qquad \psi_i(u) \leq 0 \leftrightarrow u \leq 0$

  $\psi_{m+1}, \ldots, \psi_{m+p} : \mathbf{R} \to \mathbf{R} \quad \psi_i(u) = 0 \leftrightarrow u = 0$

$$\tilde{f}_i(x) = \psi_i(f_i(x)), \quad i = 0, \ldots, m,$$

- $\psi_0 : \mathbf{R} \to \mathbf{R}$

  $\psi_1, \ldots, \psi_m : \mathbf{R} \to \mathbf{R} \qquad \psi_i(u) \leq 0 \leftrightarrow u \leq 0$

  $\psi_{m+1}, \ldots, \psi_{m+p} : \mathbf{R} \to \mathbf{R} \quad \psi_i(u) = 0 \leftrightarrow u = 0$

$$\tilde{f}_i(x) = \psi_i(f_i(x)), \quad i = 0, \ldots, m,$$

$$\tilde{h}_i(x) = \psi_{m+i}(h_i(x)), \quad i = 1, \ldots, p.$$

- $\psi_0 : \mathbf{R} \to \mathbf{R}$

  $\psi_1, \ldots, \psi_m : \mathbf{R} \to \mathbf{R} \qquad \psi_i(u) \leq 0 \leftrightarrow u \leq 0$

  $\psi_{m+1}, \ldots, \psi_{m+p} : \mathbf{R} \to \mathbf{R} \quad \psi_i(u) = 0 \leftrightarrow u = 0$

$$\tilde{f}_i(x) = \psi_i(f_i(x)), \quad i = 0, \ldots, m,$$

$$\tilde{h}_i(x) = \psi_{m+i}(h_i(x)), \quad i = 1, \ldots, p.$$

$$\begin{array}{ll} \text{minimize} & f_0(x) \\ \text{subject to} & f_i(x) \leq 0, \quad i = 1, \ldots, m \\ & h_i(x) = 0, \quad i = 1, \ldots, p \end{array}$$

$$\begin{array}{ll} \text{minimize} & \tilde{f}_0(x) \\ \text{subject to} & \tilde{f}_i(x) \leq 0, \quad i = 1, \ldots, m \\ & \tilde{h}_i(x) = 0, \quad i = 1, \ldots, p \end{array}$$

- $$\text{minimize} \quad \|Ax - b\|_2$$

- $$\text{minimize} \quad \|Ax - b\|_2$$

  $$\text{minimize} \quad \|Ax - b\|_2^2$$

- $$\text{minimize} \quad \|Ax - b\|_2$$

  $$\text{minimize} \quad \|Ax - b\|_2^2$$

-

- $$\text{minimize} \quad \|Ax - b\|_2$$

  $$\text{minimize} \quad \|Ax - b\|_2^2$$

- $$h_i(x) = 0, \quad i = 1, \ldots, p,$$

- $$\text{minimize} \quad \|Ax - b\|_2$$

  $$\text{minimize} \quad \|Ax - b\|_2^2$$

- $$h_i(x) = 0, \quad i = 1, \ldots, p,$$

$$z \in \mathbf{R}^k \quad \phi : \mathbf{R}^k \to \mathbf{R}^n \quad x = \phi(z)$$

- $$\begin{array}{ll} \text{minimize} & \|Ax - b\|_2 \\ \text{minimize} & \|Ax - b\|_2^2 \end{array}$$

- $$h_i(x) = 0, \quad i = 1, \ldots, p,$$

$$z \in \mathbf{R}^k \quad \phi : \mathbf{R}^k \to \mathbf{R}^n \quad x = \phi(z)$$

$$\begin{array}{ll} \text{minimize} & \tilde{f}_0(z) = f_0(\phi(z)) \\ \text{subject to} & \tilde{f}_i(z) = f_i(\phi(z)) \leq 0, \quad i = 1, \ldots, m \end{array}$$

- $$Ax = b$$

- $$Ax = b$$

$$\mathcal{R}(F) = \mathcal{N}(A)$$

- $$Ax = b$$

$$\mathcal{R}(F) = \mathcal{N}(A)$$

$$x = Fz + x_0$$

- $$Ax = b$$

$$\mathcal{R}(F) = \mathcal{N}(A)$$

$$x = Fz + x_0$$

$$\begin{array}{ll} \text{minimize} & f_0(x) \\ \text{subject to} & f_i(x) \leq 0, \quad i = 1, \ldots, m \\ & h_i(x) = 0, \quad i = 1, \ldots, p \end{array}$$

- $$Ax = b$$

$$\mathcal{R}(F) = \mathcal{N}(A)$$

$$x = Fz + x_0$$

$$\begin{array}{ll} \text{minimize} & f_0(x) \\ \text{subject to} & f_i(x) \leq 0, \quad i = 1, \ldots, m \\ & h_i(x) = 0, \quad i = 1, \ldots, p \end{array}$$

$$\begin{array}{ll} \text{minimize} & f_0(Fz + x_0), \\ \text{subject to} & f_i(Fz + x_0) \leq 0, \quad i = 1, \ldots, m, \end{array}$$

-

$$
\begin{array}{ll}
\text{minimize} & f_0(x) \\
\text{subject to} & f_i(x) \leq 0, \quad i = 1, \ldots, m \\
& a_i^T x = b_i, \quad i = 1, \ldots, p
\end{array}
$$

$$
\begin{array}{ll}
\text{minimize} & f_0(x) \\
\text{subject to} & f_i(x) \leq 0, \quad i = 1, \ldots, m \\
& a_i^T x = b_i, \quad i = 1, \ldots, p
\end{array}
$$

- $f_0, f_1, \ldots, f_m$

-

$$
\begin{array}{ll}
\text{minimize} & f_0(x) \\
\text{subject to} & f_i(x) \le 0, \quad i = 1, \ldots, m \\
& a_i^T x = b_i, \quad i = 1, \ldots, p
\end{array}
$$

  - $f_0, f_1, \ldots, f_m$

-

-

$$\begin{array}{ll} \text{minimize} & f_0(x) \\ \text{subject to} & f_i(x) \le 0, \quad i = 1, \ldots, m \\ & a_i^T x = b_i, \quad i = 1, \ldots, p \end{array}$$

  - $f_0, f_1, \ldots, f_m$

-

$$\begin{array}{ll} \text{minimize} & f_0(x) \\ \text{subject to} & f_i(x) \le 0, \quad i = 1, \ldots, m \\ & Ax = b \end{array}$$

-

$$\begin{array}{ll} \text{minimize} & f_0(x) \\ \text{subject to} & f_i(x) \le 0, \quad i = 1, \ldots, m \\ & a_i^T x = b_i, \quad i = 1, \ldots, p \end{array}$$

  - $f_0, f_1, \ldots, f_m$

-

$$\begin{array}{ll} \text{minimize} & f_0(x) \\ \text{subject to} & f_i(x) \le 0, \quad i = 1, \ldots, m \\ & Ax = b \end{array}$$

-

$$
\begin{array}{ll}
\text{minimize} & f_0(x) = x_1^2 + x_2^2 \\
\text{subject to} & f_1(x) = x_1/(1 + x_2^2) \leq 0 \\
& h_1(x) = (x_1 + x_2)^2 = 0
\end{array}
$$

$$
\begin{array}{ll}
\text{minimize} & f_0(x) = x_1^2 + x_2^2 \\
\text{subject to} & f_1(x) = x_1/(1 + x_2^2) \leq 0 \\
& h_1(x) = (x_1 + x_2)^2 = 0
\end{array}
$$

- f_0

$$\{(x_1, x_2) \mid x_1 = -x_2 \leq 0\}$$

$$
\begin{array}{ll}
\text{minimize} & f_0(x) = x_1^2 + x_2^2 \\
\text{subject to} & f_1(x) = x_1/(1 + x_2^2) \leq 0 \\
& h_1(x) = (x_1 + x_2)^2 = 0
\end{array}
$$

- f_0
- $\{(x_1, x_2) \mid x_1 = -x_2 \leq 0\}$
- f h

$$
\begin{array}{ll}
\text{minimize} & f_0(x) = x_1^2 + x_2^2 \\
\text{subject to} & f_1(x) = x_1/(1 + x_2^2) \leq 0 \\
& h_1(x) = (x_1 + x_2)^2 = 0
\end{array}
$$

- f_0 $\{(x_1, x_2) \mid x_1 = -x_2 \leq 0\}$
- f h
-

$$
\begin{array}{ll}
\text{minimize} & f_0(x) = x_1^2 + x_2^2 \\
\text{subject to} & f_1(x) = x_1/(1 + x_2^2) \leq 0 \\
& h_1(x) = (x_1 + x_2)^2 = 0
\end{array}
$$

- f_0
- $\{(x_1, x_2) \mid x_1 = -x_2 \leq 0\}$
- f h
- $$
\begin{array}{ll}
\text{minimize} & x_1^2 + x_2^2 \\
\text{subject to} & x_1 \leq 0 \\
& x_1 + x_2 = 0
\end{array}
$$

$$
\begin{array}{ll}
\text{minimize} & f_0(x) \\
\text{subject to} & f_i(x) \leq 0, \quad i = 1, \ldots, m \\
& Ax = b
\end{array}
$$

$$
\begin{array}{ll}
\text{minimize} & f_0(x) \\
\text{subject to} & f_i(x) \le 0, \quad i = 1, \ldots, m \\
& Ax = b
\end{array}
$$

$$
\begin{array}{ll}
\text{minimize} & f_0(Fz + x_0), \\
\text{subject to} & f_i(Fz + x_0) \le 0, \quad i = 1, \ldots, m,
\end{array}
$$

$$
\begin{array}{ll}
\text{minimize} & f_0(x) \\
\text{subject to} & f_i(x) \le 0, \quad i = 1, \ldots, m \\
& Ax = b
\end{array}
$$

$$
\begin{array}{ll}
\text{minimize} & f_0(Fz + x_0), \\
\text{subject to} & f_i(Fz + x_0) \le 0, \quad i = 1, \ldots, m,
\end{array}
$$

$$Ax = b \quad \Longleftrightarrow \quad x = Fz + x_0 \text{ for some } z$$

$$
\begin{array}{ll}
\text{minimize} & f_0(x) \\
\text{subject to} & f_i(x) \le 0, \quad i = 1, \ldots, m \\
& Ax = b
\end{array}
$$

$$
\begin{array}{ll}
\text{minimize} & f_0(Fz + x_0) \\
\text{subject to} & f_i(Fz + x_0) \le 0, \quad i = 1, \ldots, m,
\end{array}
$$

$$Ax = b \iff x = Fz + x_0 \text{ for some } z$$

-

- $$\begin{array}{ll} \text{minimize} & f_0(x) \\ \text{subject to} & a_i^T x \leq b_i, \quad i = 1, \ldots, m \end{array}$$

- $$\begin{array}{ll} \text{minimize} & f_0(x) \\ \text{subject to} & a_i^T x \leq b_i, \quad i = 1, \ldots, m \end{array}$$

$$\begin{array}{ll} \text{minimize (over } x,\ s) & f_0(x) \\ \text{subject to} & a_i^T x + s_i = b_i, \quad i = 1, \ldots, m \\ & s_i \geq 0, \quad i = 1, \ldots m \end{array}$$

$$
\begin{array}{ll}
\text{minimize} & f_0(x) \\
\text{subject to} & f_i(x) \leq 0, \quad i = 1, \ldots, m \\
& a_i^T x = b_i, \quad i = 1, \ldots, p
\end{array}
$$

$$
\begin{array}{ll}
\text{minimize} & f_0(x) \\
\text{subject to} & f_i(x) \leq 0, \quad i = 1, \ldots, m \\
& a_i^T x = b_i, \quad i = 1, \ldots, p
\end{array}
$$

-

$$
\begin{array}{ll}
\text{minimize} & f_0(x) \\
\text{subject to} & f_i(x) \leq 0, \quad i = 1, \ldots, m \\
& a_i^T x = b_i, \quad i = 1, \ldots, p
\end{array}
$$

-
-
  -

-

-
- x

y x $R > 0$ $f_0(y) < f_0(x)$

- z $\|z - x\|_2 \leq R \implies f_0(z) \geq f_0(x)$

-
- x

-
- x

y x $R > 0$ $f_0(y) < f_0(x)$

- z $\|z - x\|_2 \leq R \implies f_0(z) \geq f_0(x)$
- $z = \theta y + (1 - \theta)x$ with $\theta = R/(2\|y - x\|_2)$
- $\|y - x\|_2 > R$ $0 < \theta < 1/2$

-
- x

y x $R > 0$ $f_0(y) < f_0(x)$

- z $\|z - x\|_2 \leq R \implies f_0(z) \geq f_0(x)$
- $z = \theta y + (1-\theta)x$ with $\theta = R/(2\|y - x\|_2)$
- $\|y - x\|_2 > R$ $0 < \theta < 1/2$
- z $\|z - x\|_2 = R/2$

$$f_0(z) \leq \theta f_0(y) + (1-\theta) f_0(x) < f_0(x)$$

-
- x

y x $R > 0$ $f_0(y) < f_0(x)$

- z $\|z - x\|_2 \leq R \implies f_0(z) \geq f_0(x)$
- $z = \theta y + (1-\theta)x$ with $\theta = R/(2\|y - x\|_2)$
- $\|y - x\|_2 > R$ $0 < \theta < 1/2$
- z $\|z - x\|_2 = R/2$

$$f_0(z) \leq \theta f_0(y) + (1-\theta) f_0(x) < f_0(x)$$

- x

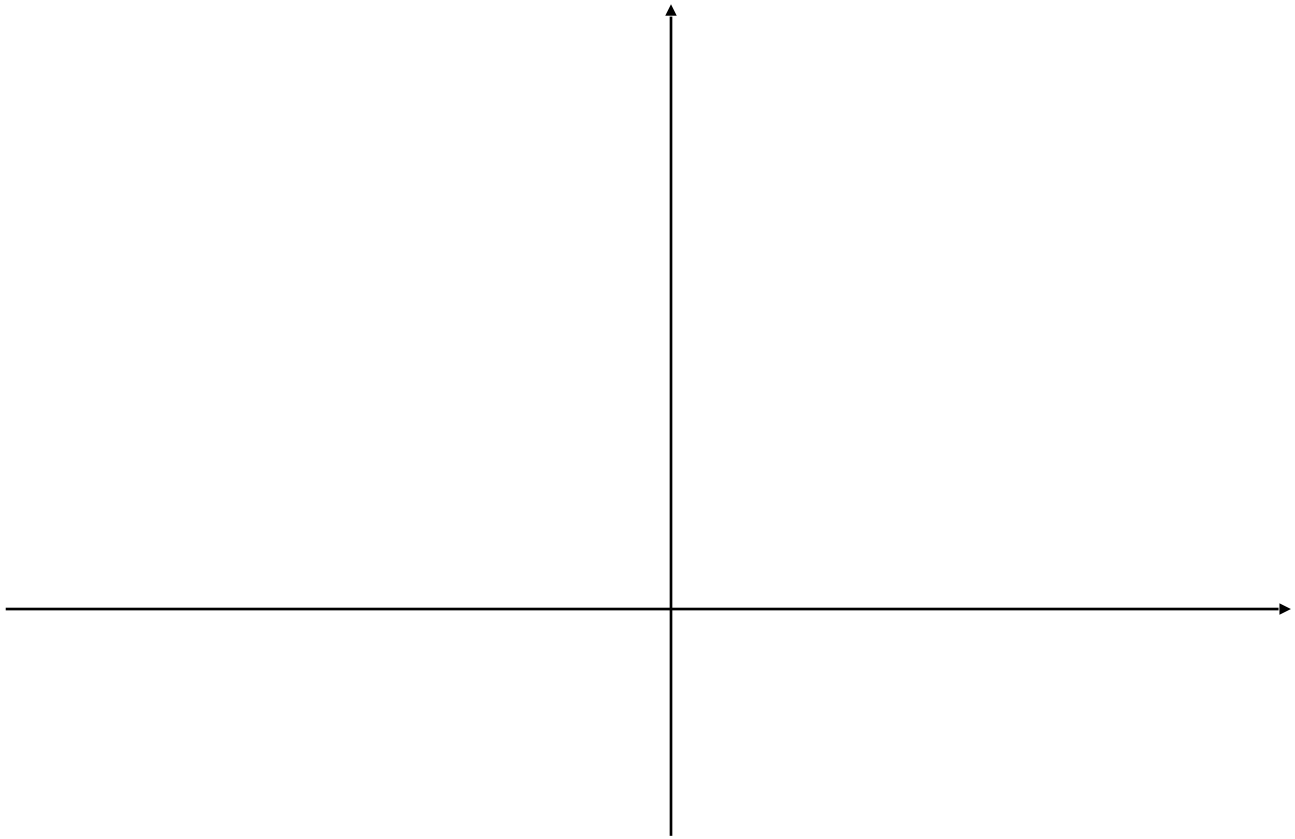

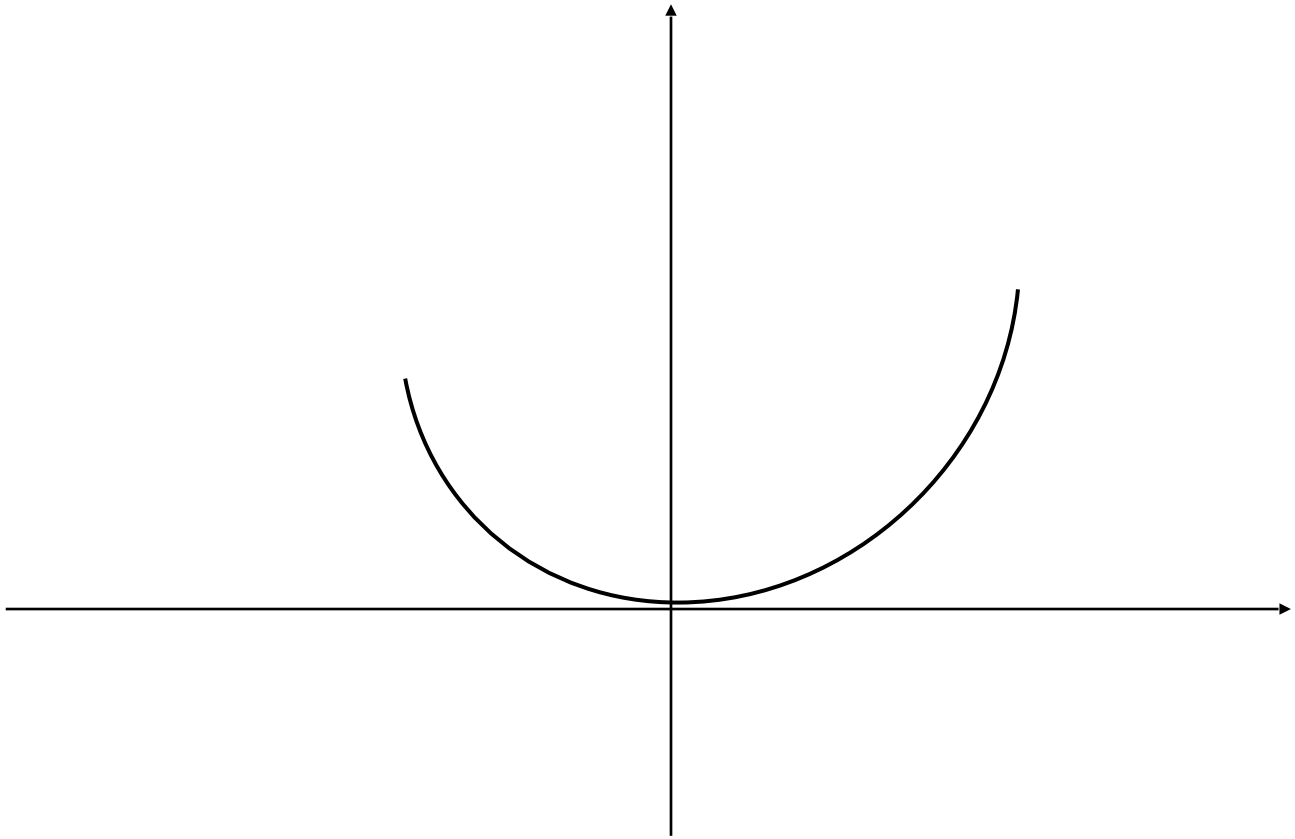

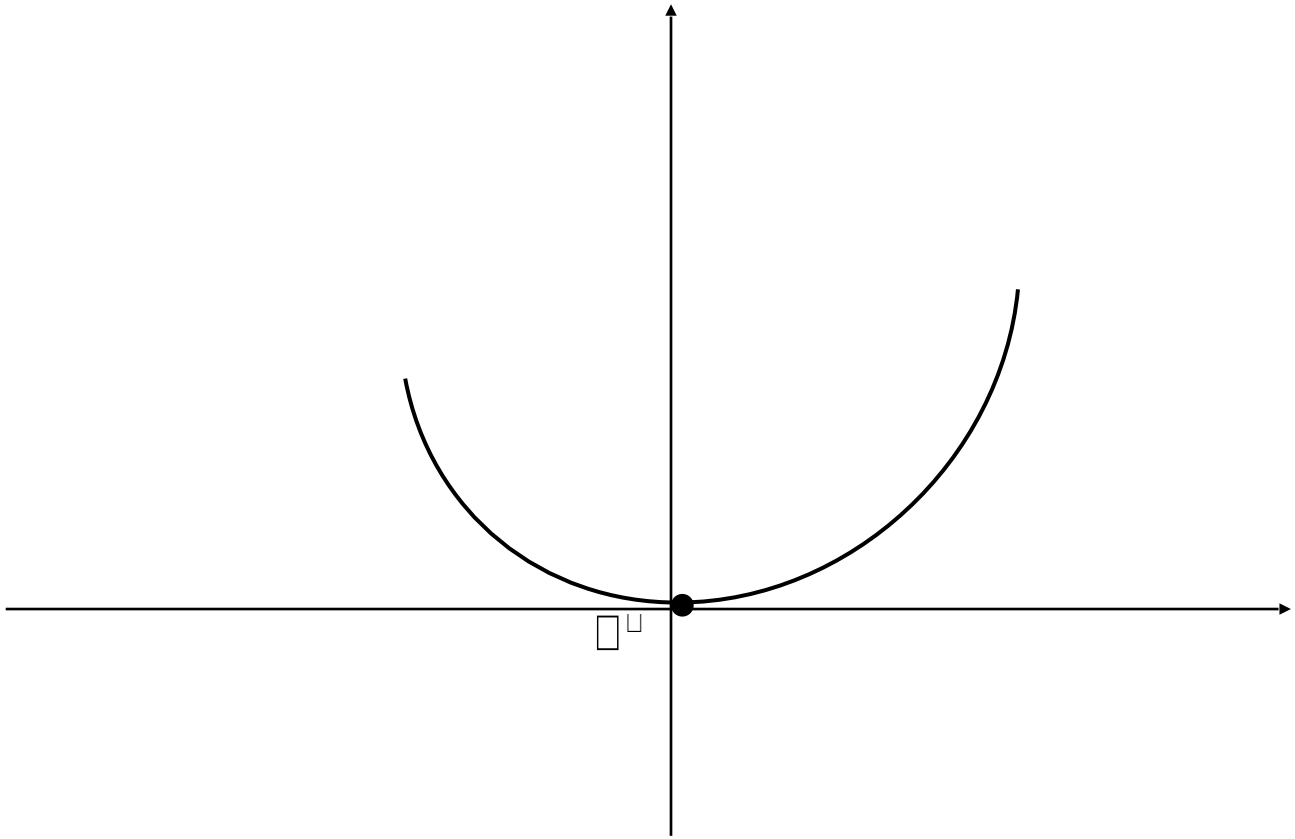

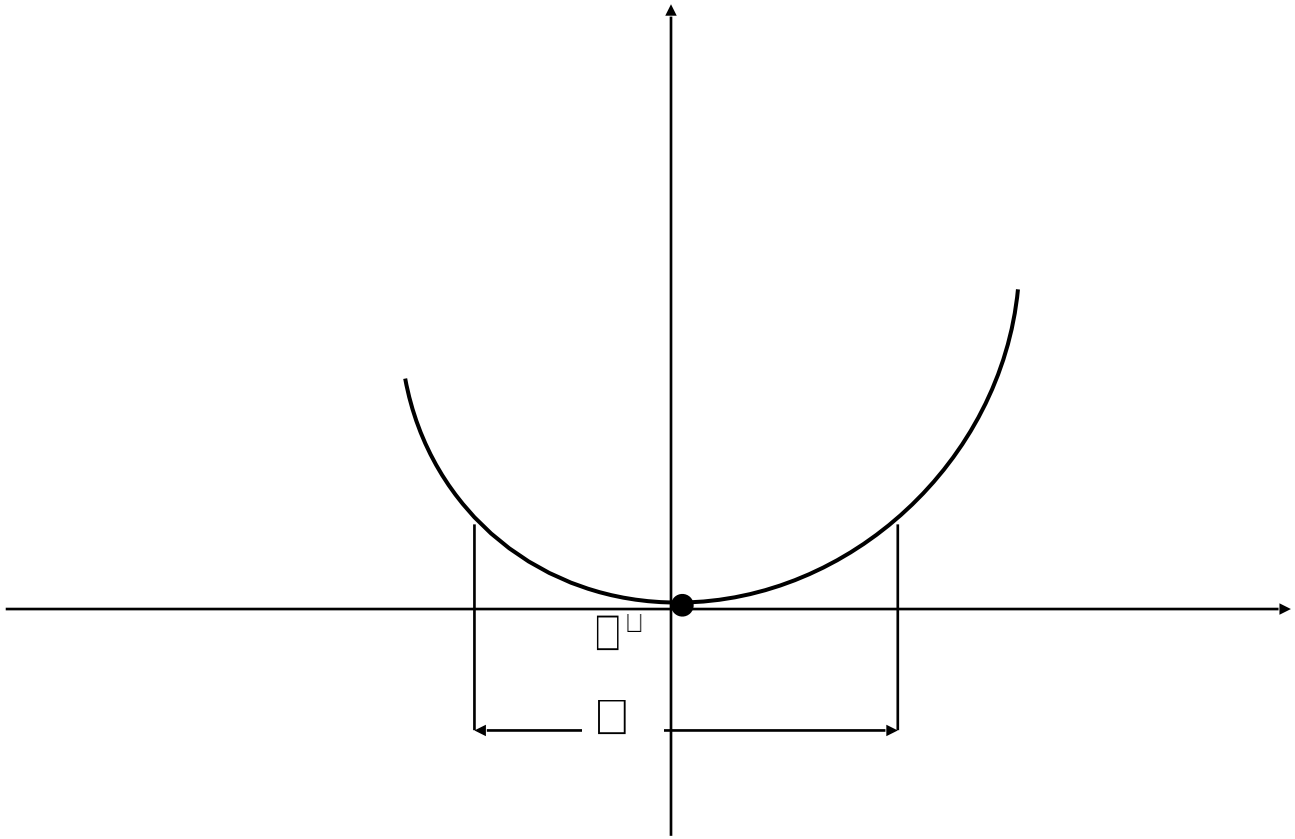

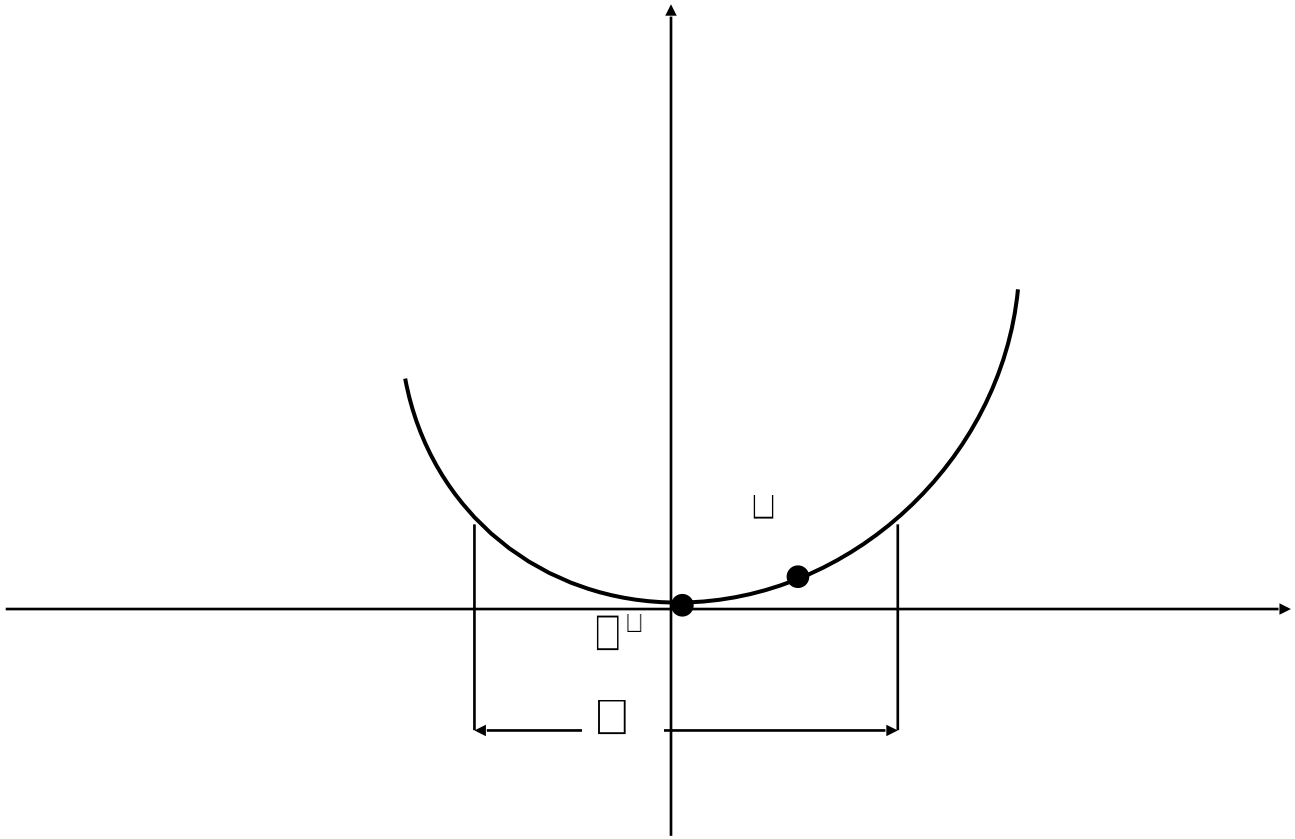

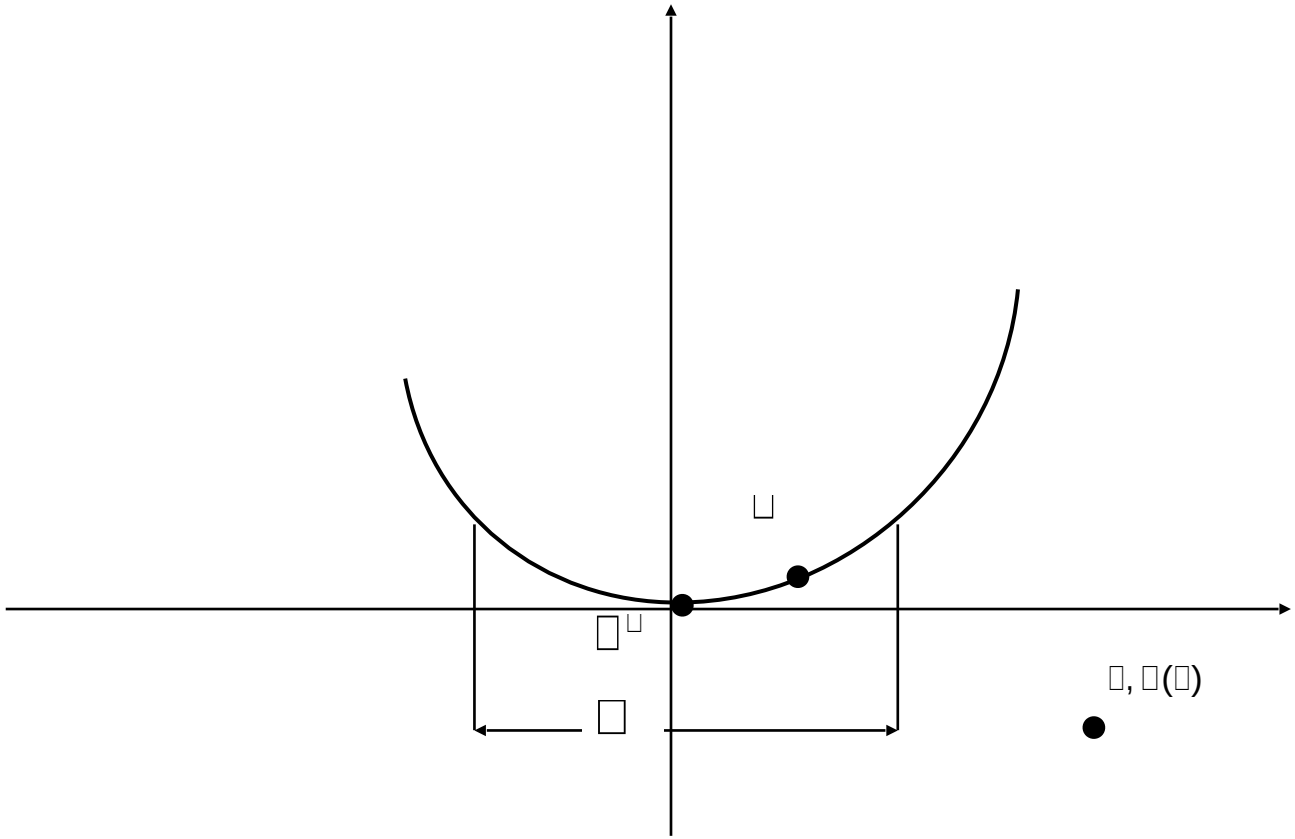

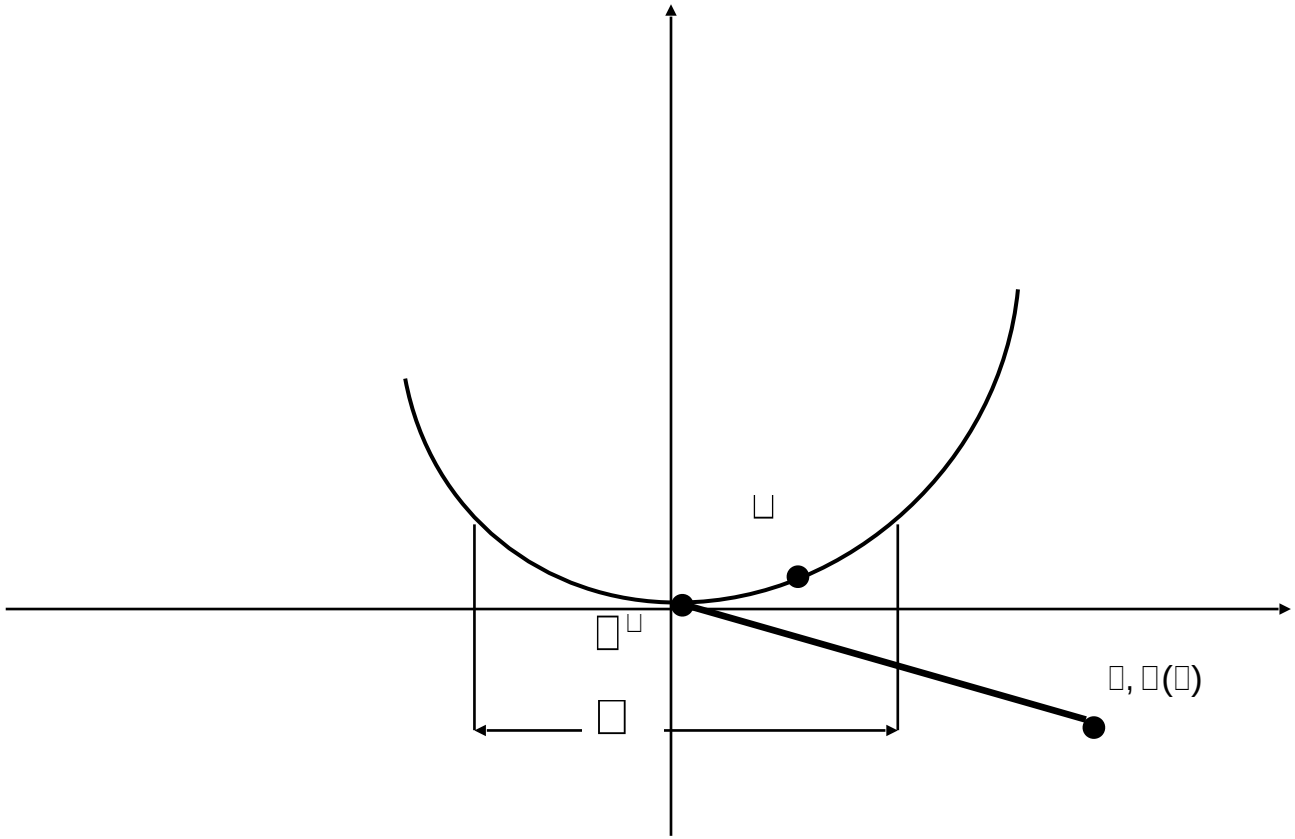

- x x

- x x

$$\nabla f_0(x)^T(y-x) \geq 0 \quad \text{for all feasible } y$$

- x x

$$\nabla f_0(x)^T(y-x) \geq 0 \quad \text{for all feasible } y$$

-

- x x

$$\nabla f_0(x)^T(y-x) \geq 0 \quad \text{for all feasible } y$$

-

$$f(y) \geq f(x) + \nabla f(x)^T(y-x) \quad \text{for all } x, y \in \mathbf{dom}\, f$$

- x x

$$\nabla f_0(x)^T(y-x) \geq 0 \quad \text{for all feasible } y$$

-

$$f(y) \geq f(x) + \nabla f(x)^T(y-x) \quad \text{for all } x, y \in \mathbf{dom}\, f$$

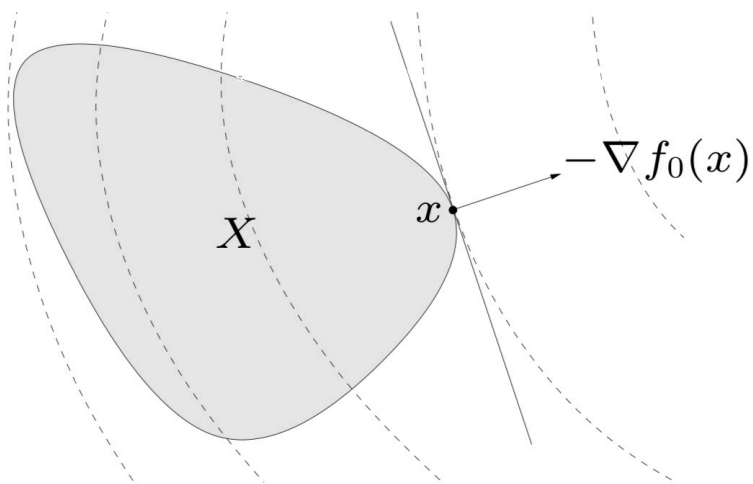

- x

- x

$$x \in \mathbf{dom}\, f_0, \qquad \nabla f_0(x) = 0$$

- x

$$x \in \mathbf{dom}\, f_0, \qquad \nabla f_0(x) = 0$$

-

$$\text{minimize} \quad f_0(x) \quad \text{subject to} \quad Ax = b$$

- x

$$x \in \mathbf{dom}\, f_0, \qquad \nabla f_0(x) = 0$$

-

$$\text{minimize} \quad f_0(x) \quad \text{subject to} \quad Ax = b$$

- x

$$Ay = b \quad \nabla f_0(x)^T (y - x) \geq 0$$

- x

$$x \in \mathbf{dom}\, f_0, \qquad \nabla f_0(x) = 0$$

-

$$\text{minimize} \quad f_0(x) \quad \text{subject to} \quad Ax = b$$

- x

$$Ay = b \quad \nabla f_0(x)^T (y - x) \geq 0$$

$$Ax = b \;\; Ay = b$$

- x

$$x \in \mathbf{dom}\, f_0, \qquad \nabla f_0(x) = 0$$

-

$$\text{minimize} \quad f_0(x) \quad \text{subject to} \quad Ax = b$$

- x $\quad Ay = b \quad \nabla f_0(x)^T (y - x) \geq 0$

$$Ax = b \;\; Ay = b \Longrightarrow y = x + v \;\; v \in \mathcal{N}(A)$$

- x

$$x \in \mathbf{dom}\, f_0, \qquad \nabla f_0(x) = 0$$

- minimize $f_0(x)$ subject to $Ax = b$

- x $\quad Ay = b \quad \nabla f_0(x)^T (y - x) \geq 0$

$$Ax = b \quad Ay = b \Rightarrow y = x + v \quad v \in \mathcal{N}(A)$$

$$\nabla f_0(x)^T v \geq 0 \text{ for all } v \in \mathcal{N}(A)$$

- x

$$x \in \mathbf{dom}\, f_0, \qquad \nabla f_0(x) = 0$$

- minimize $f_0(x)$ subject to $Ax = b$

- x $\quad Ay = b \quad \nabla f_0(x)^T (y - x) \geq 0$

$$Ax = b \quad Ay = b \Rightarrow y = x + v \quad v \in \mathcal{N}(A)$$

$$\nabla f_0(x)^T v \geq 0 \text{ for all } v \in \mathcal{N}(A)$$

$$\nabla f_0(x) \perp \mathcal{N}(A)$$

$$\nabla f_0(x) \perp \mathcal{N}(A)$$

$$\nabla f_0(x) \perp \mathcal{N}(A)$$

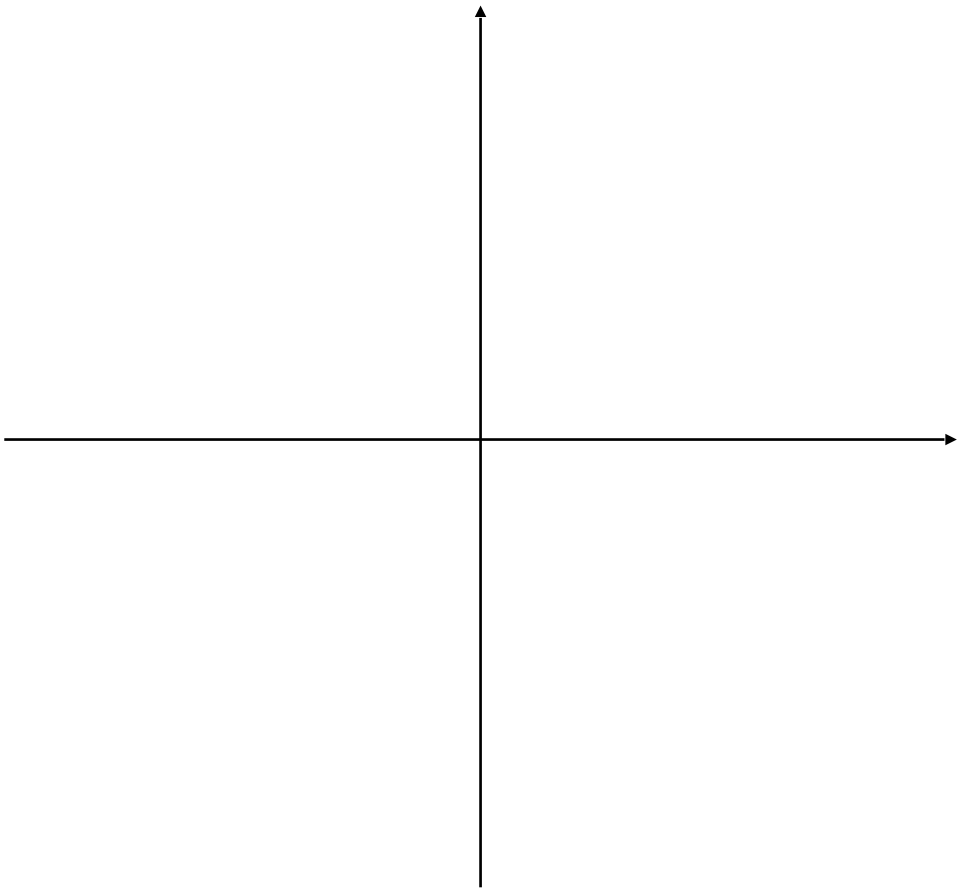

$$\nabla f_0(x) \perp \mathcal{N}(A)$$

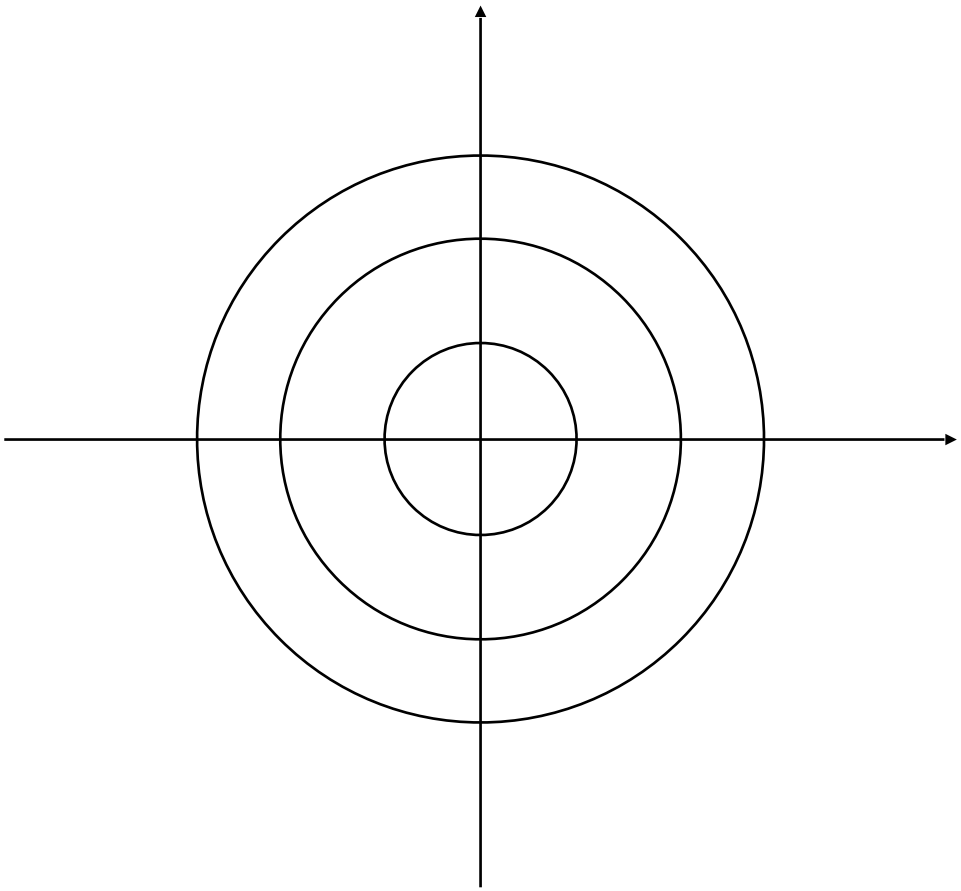

$$\nabla f_0(x) \perp \mathcal{N}(A)$$

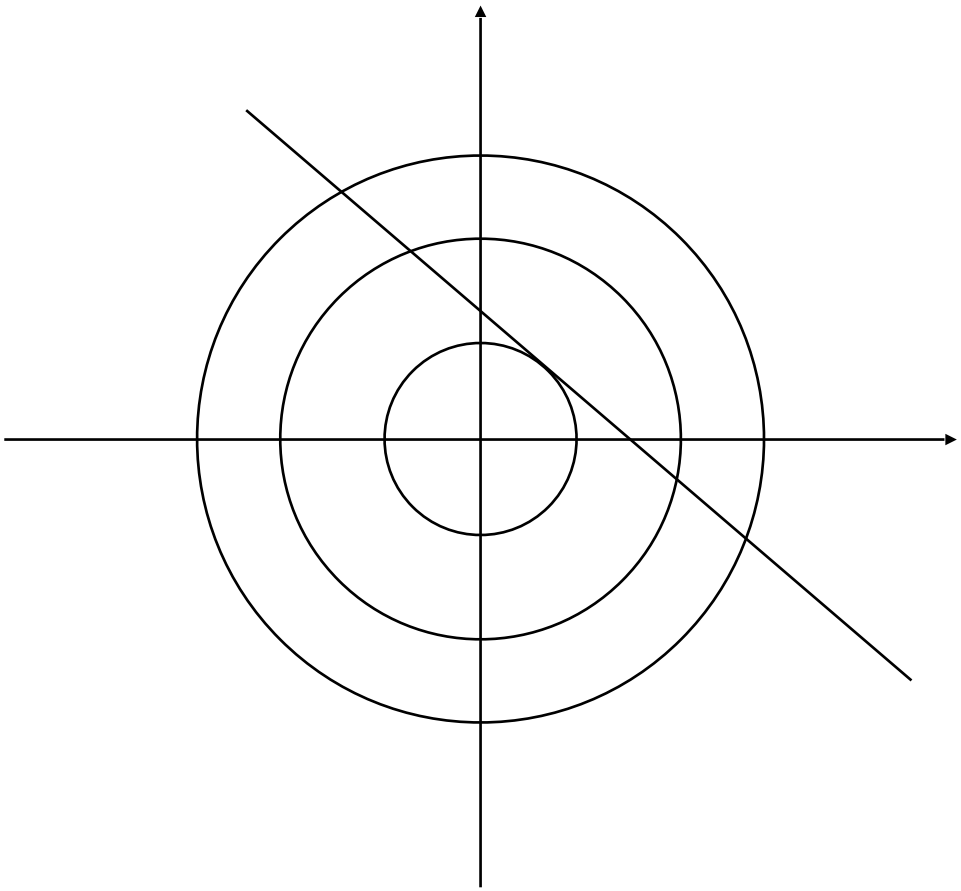

$$\nabla f_0(x) \perp \mathcal{N}(A)$$

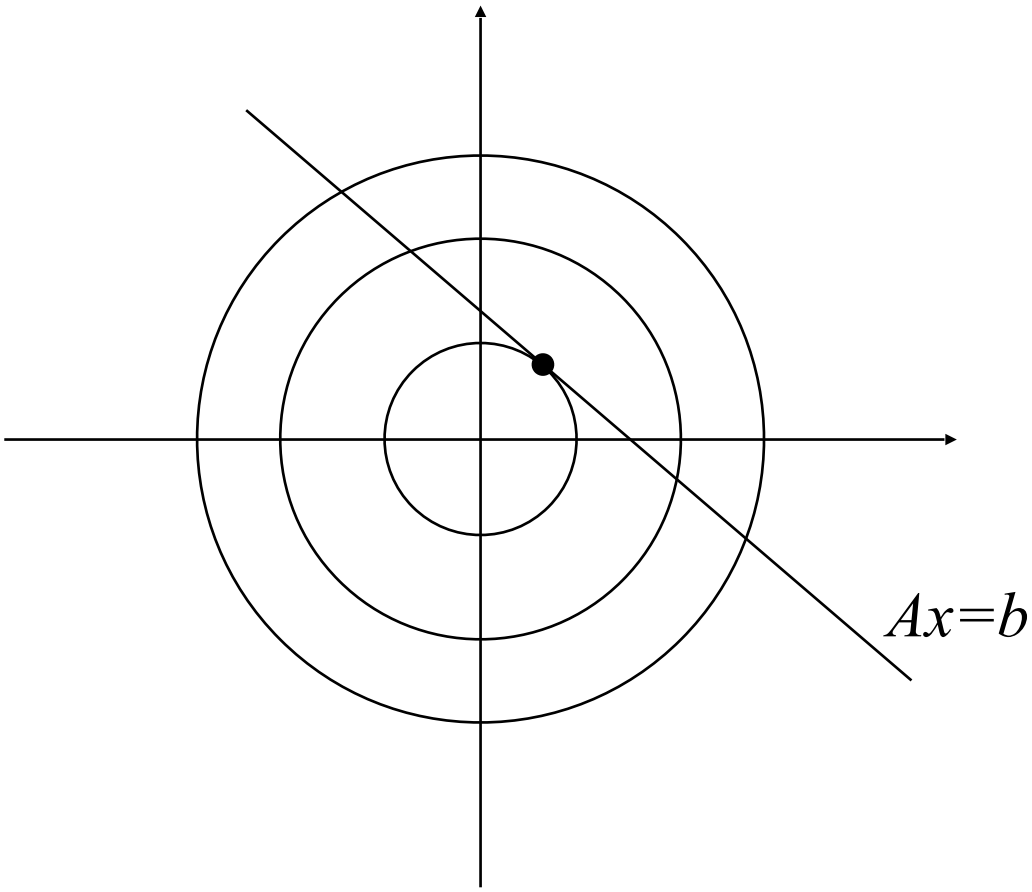

$$\nabla f_0(x) \perp \mathcal{N}(A)$$

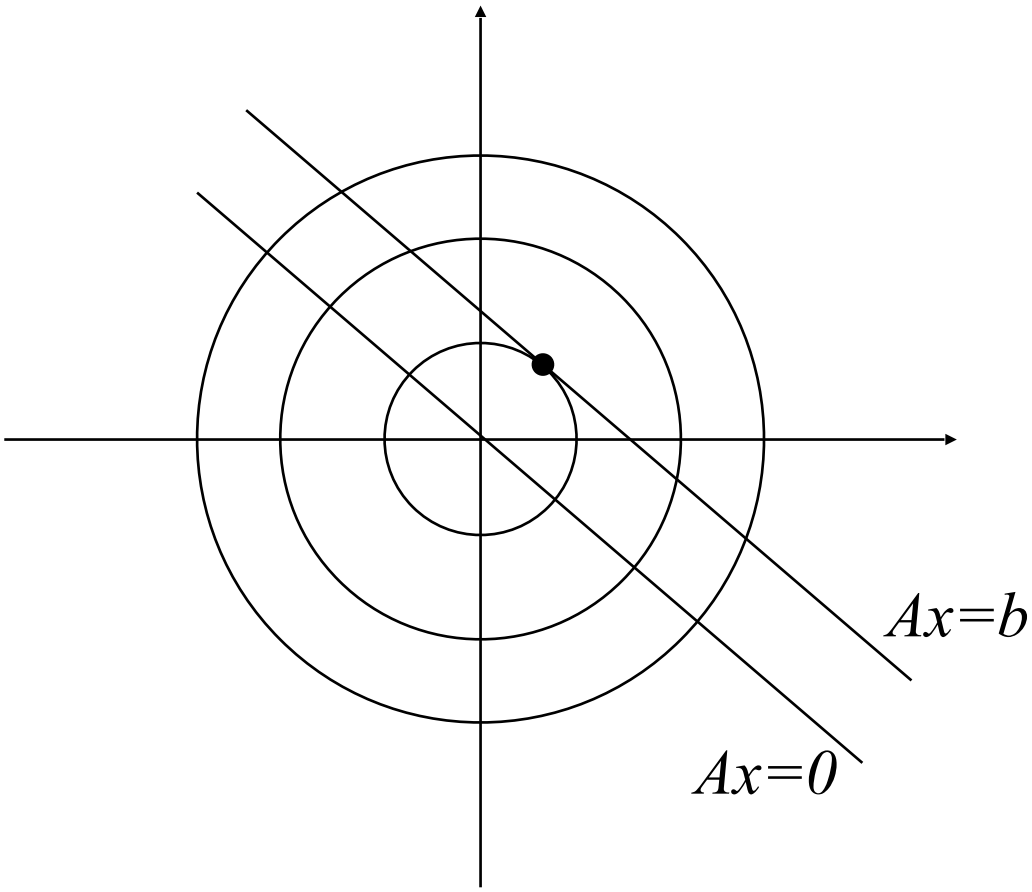

-

- $$\text{minimize} \quad f_0(x) \quad \text{subject to} \quad x \succeq 0$$

-

$$\text{minimize} \quad f_0(x) \quad \text{subject to} \quad x \succeq 0$$

- x $\qquad$ $\succeq 0, \nabla f_0(\succeq) \; (\succeq - \succeq) \geq 0$

-

$$\text{minimize} \quad f_0(x) \quad \text{subject to} \quad x \succeq 0$$

- x , □ 0, □f_0( ) (−) ≥ 0
  - □f_0( ) □ 0 □f_0( )

-

$$\text{minimize} \quad f_0(x) \quad \text{subject to} \quad x \succeq 0$$

- x $\qquad$ □ 0, □f_0( ) (−) ≥ 0
  - □f_0( ) □ 0 $\qquad$ □f_0( )
  - □f_0( ) □ 0

-

$$\text{minimize} \quad f_0(x) \quad \text{subject to} \quad x \succeq 0$$

- x $\qquad$ $\square\ 0, \square f_0(\cdot)\ (\cdot - \cdot) \geq 0$
  - $\square f_0(\cdot)\ \square\ 0 \qquad \square f_0(\cdot)\ \cdot$
  - $\square f_0(\cdot)\ \square\ 0$
  - $\cdot = 0 \qquad -\square f_0(\cdot)\ \cdot \geq 0$
  - $\square f_0(\cdot)\ \square\ 0 \quad \cdot\ \square\ 0 \qquad \square f_0(\cdot)\ \cdot \geq 0$
  - $\square f_0(\cdot)\ \cdot = 0$

-

$$\text{minimize} \quad f_0(x) \quad \text{subject to} \quad x \succeq 0$$

- x $\quad$ □ 0, □f_0( ) (−) ≥ 0
  - □f_0( ) □ 0 □f_0( )
  - □f_0( ) □ 0
  - = 0 − □f_0( ) ≥ 0
  - □f_0( ) □ 0 □ 0 □f_0( ) ≥ 0
  - □f_0( ) = 0
  - □ 0 □f_0( ) □ 0 (□f_0( )) = 0, = 1,...,

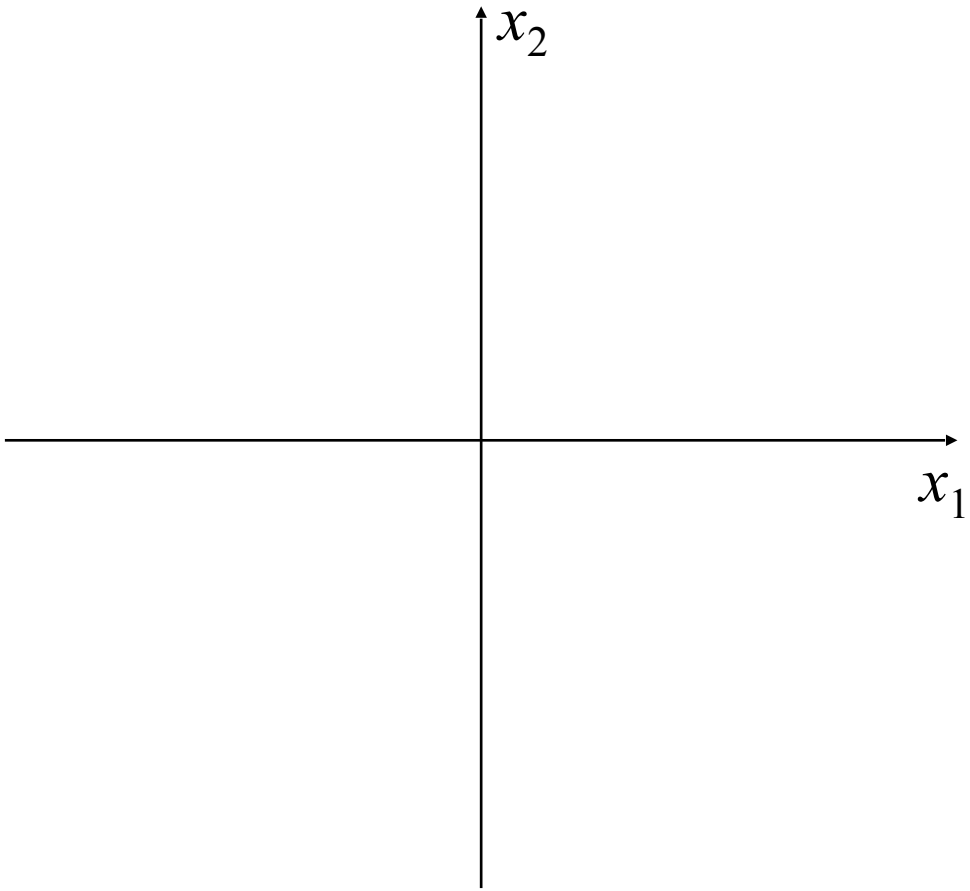
x_2
x_1

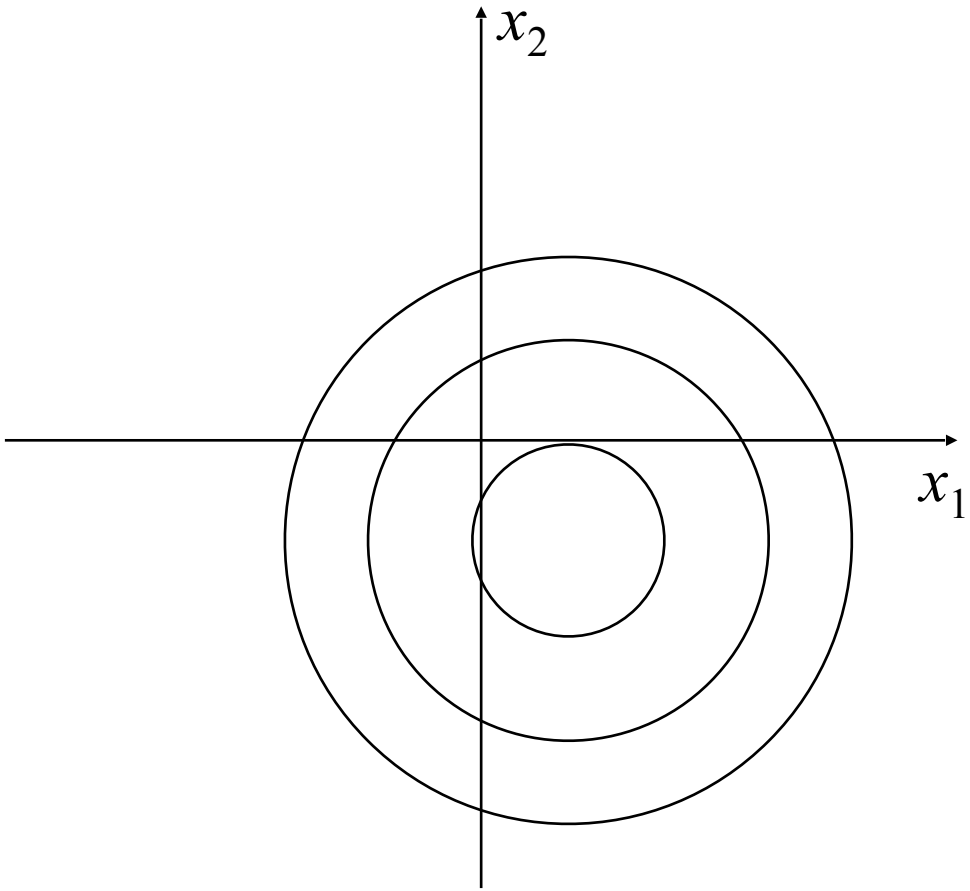
x_2
x_1

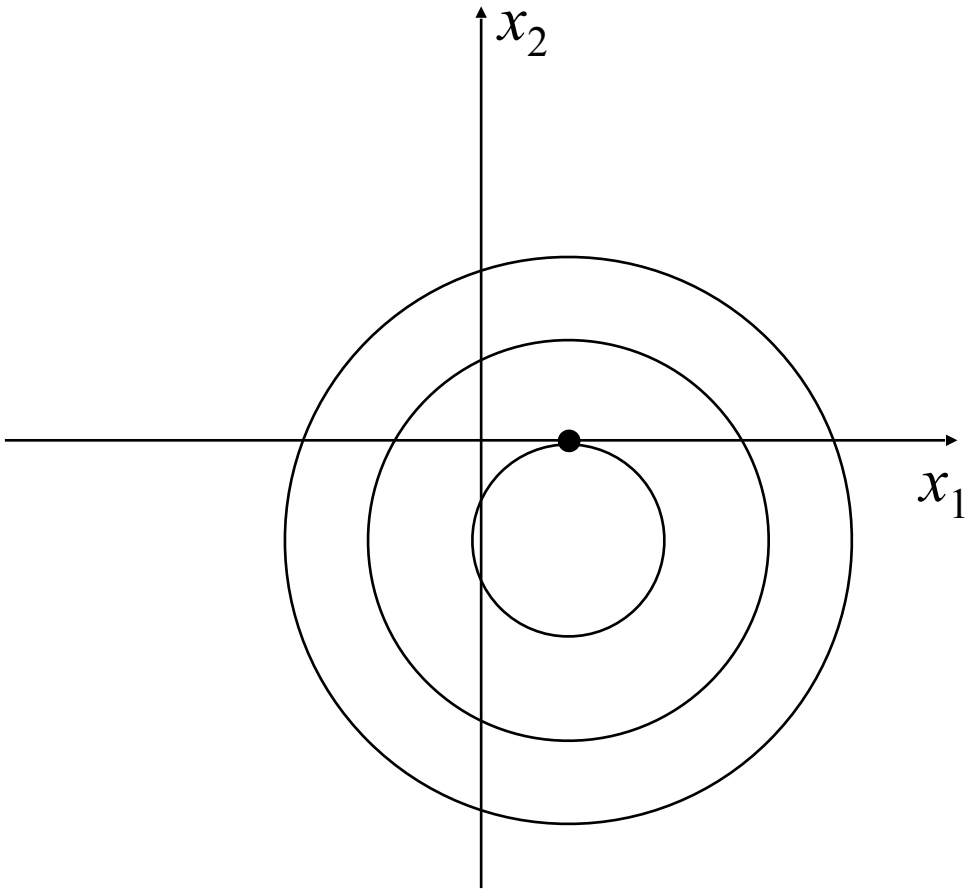
x_2
x_1

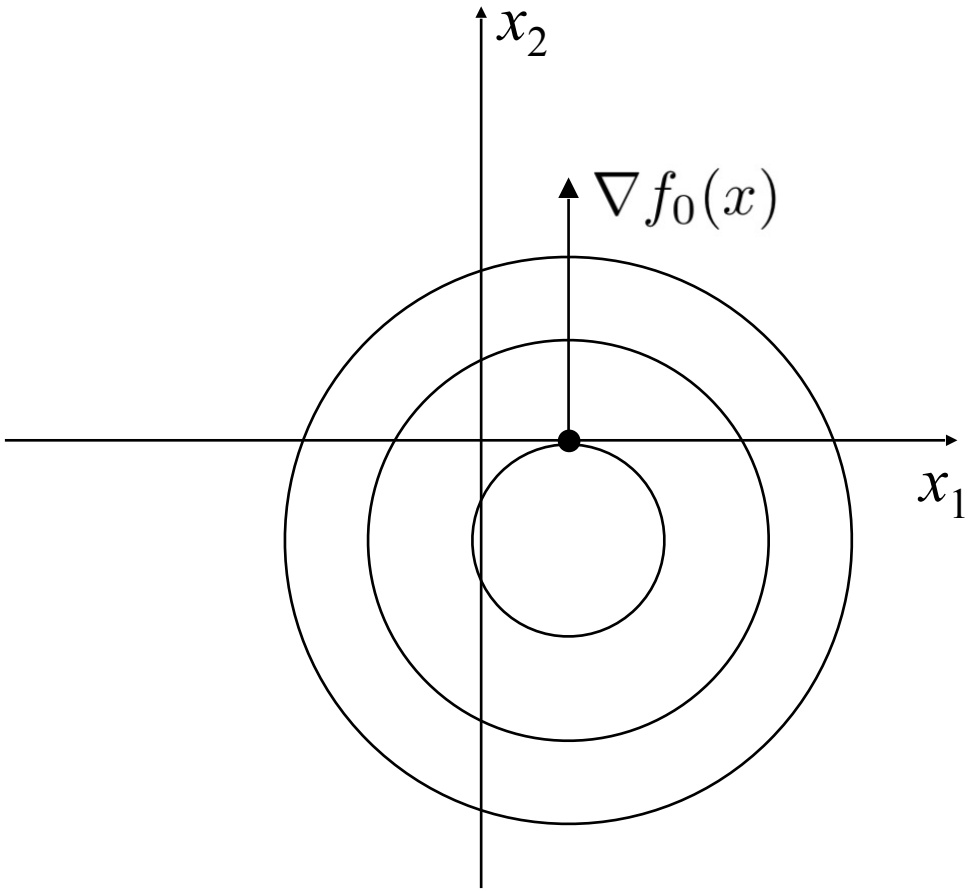
x_2
$\nabla f_0(x)$
x_1

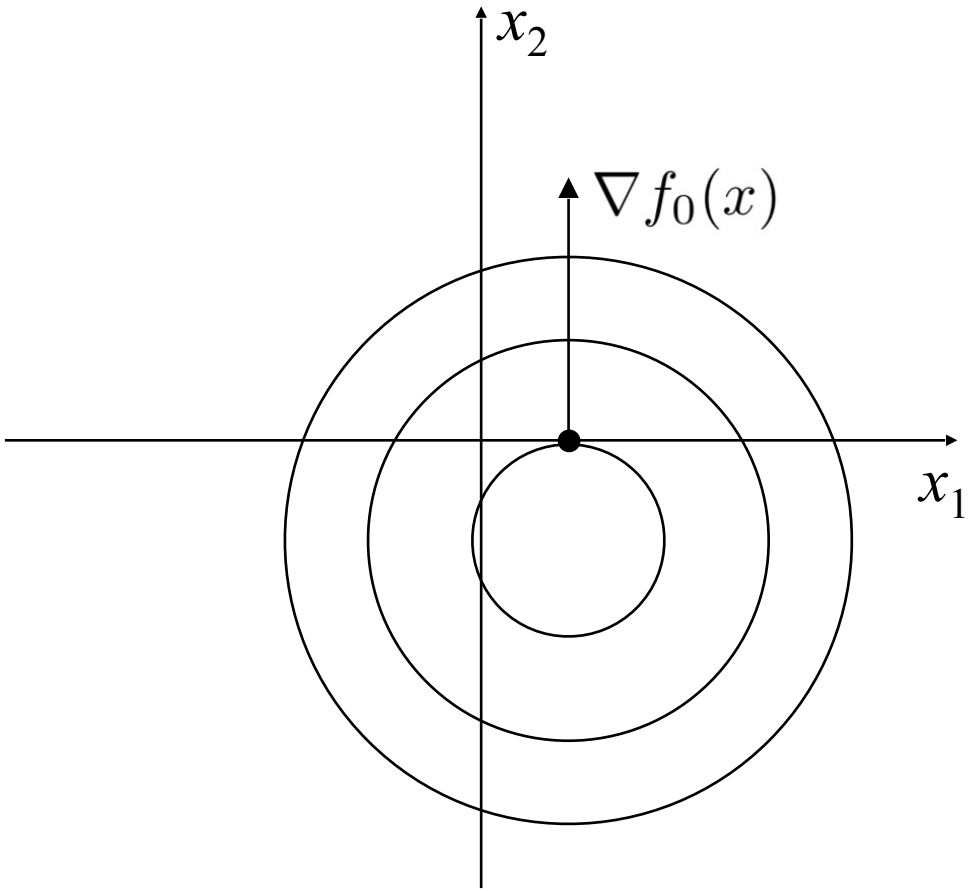

$x_1>0$

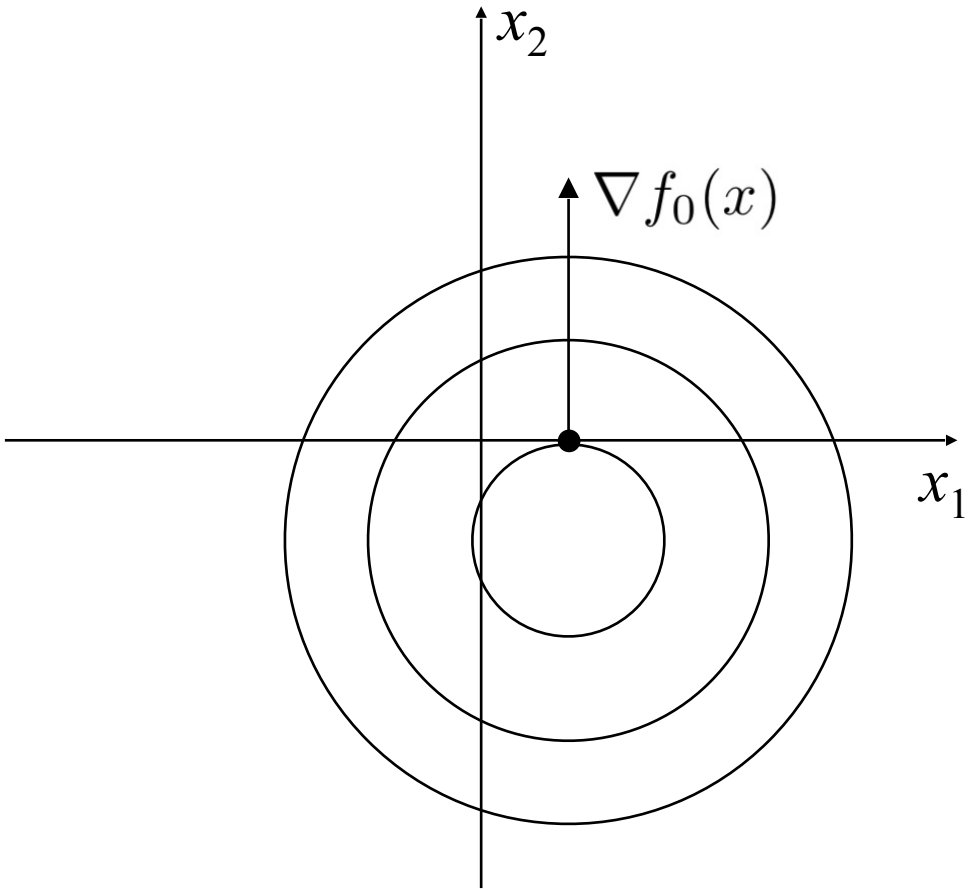

$x_1>0$ $x_2=0$

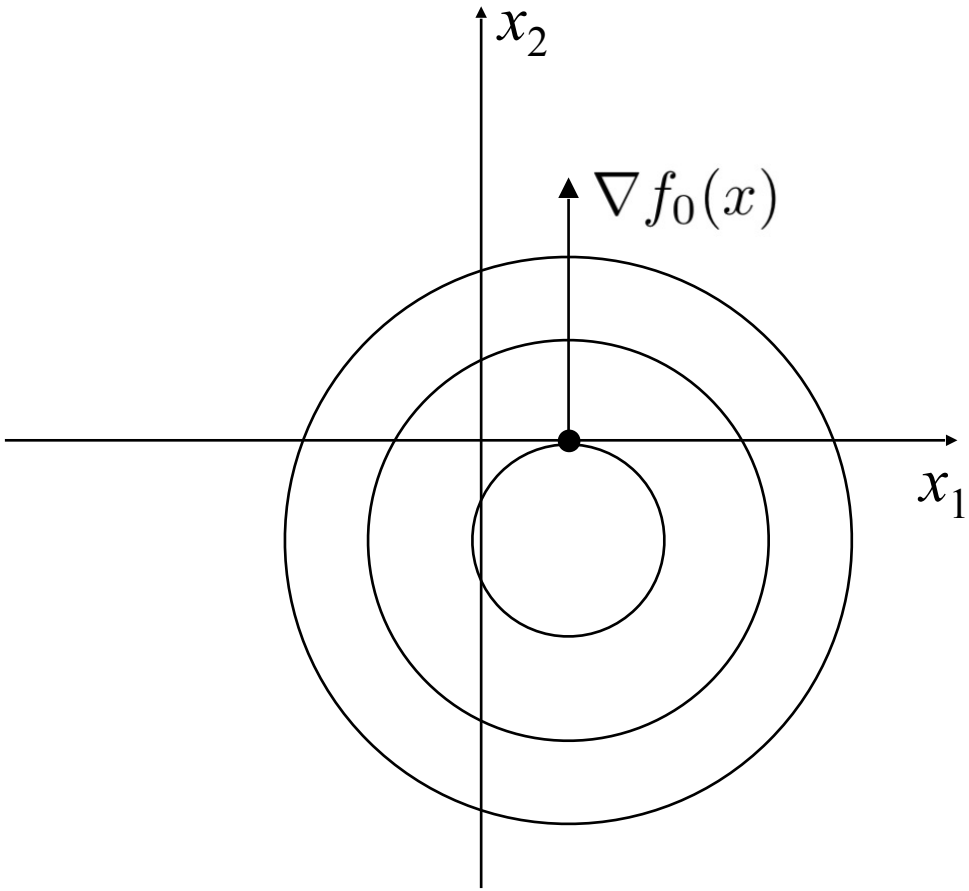

$x_1>0$

$\nabla f_0(x)$

$x_2=0$

$\nabla f_0(x)$

$$
\begin{array}{ll}
\text{minimize} & c^T x + d \\
\text{subject to} & Gx \preceq h \\
& Ax = b
\end{array}
$$

$$
\begin{array}{ll}
\text{minimize} & c^T x + d \\
\text{subject to} & Gx \preceq h \\
& Ax = b
\end{array}
$$

-

$$
\begin{array}{ll}
\text{minimize} & c^T x + d \\
\text{subject to} & Gx \preceq h \\
& Ax = b
\end{array}
$$

-
-

$$
\begin{array}{ll}
\text{minimize} & c^T x + d \\
\text{subject to} & Gx \preceq h \\
& Ax = b
\end{array}
$$

-
-

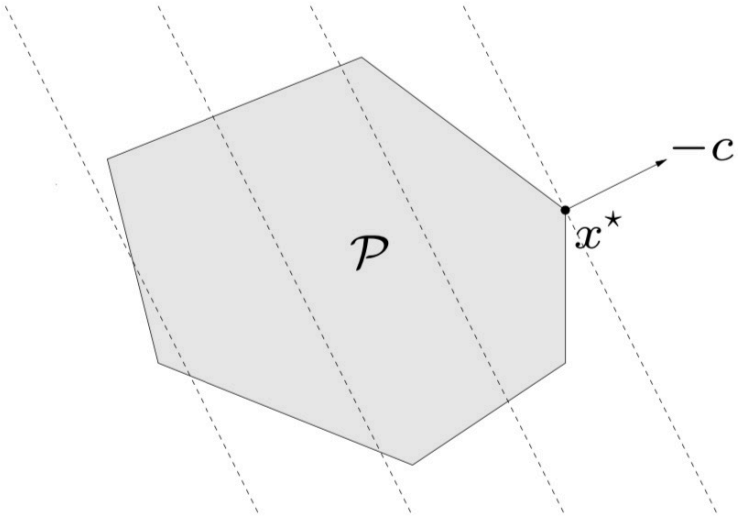

$$
\begin{array}{ll}
\text{minimize} & c^T x + d \\
\text{subject to} & Gx + s = h \\
& Ax = b \\
& s \succeq 0.
\end{array}
$$

$$
\begin{array}{ll}
\text{minimize} & c^T x + d \\
\text{subject to} & Gx + s = h \\
& Ax = b \\
& s \succeq 0.
\end{array}
$$

$x = x^+ - x^-$, $x^+, x^- \succeq 0$

$$
\begin{array}{ll}
\text{minimize} & c^T x + d \\
\text{subject to} & Gx + s = h \\
& Ax = b \\
& s \succeq 0.
\end{array}
$$

$x = x^+ - x^-$, $x^+, x^- \succeq 0$

$$
\begin{array}{ll}
\text{minimize} & c^T x^+ - c^T x^- + d \\
\text{subject to} & Gx^+ - Gx^- + s = h \\
& Ax^+ - Ax^- = b \\
& x^+ \succeq 0, \quad x^- \succeq 0, \quad s \succeq 0,
\end{array}
$$

$$
\begin{array}{ll}
\text{minimize} & c^T x + d \\
\text{subject to} & Gx + s = h \\
& Ax = b \\
& s \succeq 0.
\end{array}
$$

$x = x^+ - x^-$, $x^+, x^- \succeq 0$

$$
\begin{array}{ll}
\text{minimize} & c^T x^+ - c^T x^- + d \\
\text{subject to} & Gx^+ - Gx^- + s = h \\
& Ax^+ - Ax^- = b \\
& x^+ \succeq 0, \quad x^- \succeq 0, \quad s \succeq 0,
\end{array}
$$

$$
\begin{array}{ll}
\text{minimize} & c^T x \\
\text{subject to} & Ax \quad b \\
& x \succeq 0.
\end{array}
$$

- i b_i

- i b_i
- j i a_{ij} c_j

- i b_i
- j i a_{ij} c_j
- n $x_1, \ldots, x_n$

- i b_i
- j i a_{ij} c_j
- n $x_1, \ldots, x_n$
-

- i b_i
- j i a_{ij} c_j
- n $x_1, \ldots, x_n$
-

$$\text{minimize} \quad c^T x$$

- i b_i
- j i a_{ij} c_j
- n $x_1, \ldots, x_n$
-

$$\begin{array}{ll} \text{minimize} & c^T x \\ \text{subject to} & Ax \succeq b, \end{array}$$

- i b_i
- j i a_{ij} c_j
- n $x_1, \ldots, x_n$
-

$$\begin{array}{ll} \text{minimize} & c^T x \\ \text{subject to} & Ax \succeq b, \quad x \succeq 0 \end{array}$$

$$
\begin{array}{ll}
\text{minimize} & f_0(x) \\
\text{subject to} & Gx \preceq h \\
& Ax = b
\end{array}
$$

$$\begin{array}{ll} \text{minimize} & f_0(x) \\ \text{subject to} & Gx \preceq h \\ & Ax = b \end{array}$$

- $$f_0(x) = \frac{c^T x + d}{e^T x + f}, \qquad \mathbf{dom}\, f_0(x) = \{x \mid e^T x + f > 0\}$$

$$\begin{array}{ll} \text{minimize} & f_0(x) \\ \text{subject to} & Gx \preceq h \\ & Ax = b \end{array}$$

- $$f_0(x) = \frac{c^T x + d}{e^T x + f}, \qquad \mathbf{dom}\, f_0(x) = \{x \mid e^T x + f > 0\}$$
-

$$\begin{array}{ll} \text{minimize} & f_0(x) \\ \text{subject to} & Gx \preceq h \\ & Ax = b \end{array}$$

- $f_0(x) = \dfrac{c^T x + d}{e^T x + f}, \qquad \mathbf{dom}\, f_0(x) = \{x \mid e^T x + f > 0\}$
-
-

$$\begin{array}{ll} \text{minimize} & f_0(x) \\ \text{subject to} & Gx \preceq h \\ & Ax = b \end{array}$$

- $f_0(x) = \dfrac{c^T x + d}{e^T x + f}, \qquad \mathbf{dom}\, f_0(x) = \{x \mid e^T x + f > 0\}$
-
-

$$\begin{array}{ll} \text{minimize} & c^T y + dz \\ \text{subject to} & Gy \preceq hz \\ & Ay = bz \\ & e^T y + fz = 1 \\ & z \geq 0 \end{array}$$

-
  - x

-
  - x $$y = \frac{x}{e^T x + f} \quad z = \frac{1}{e^T x + f}$$

-
  - x $\qquad y = \dfrac{x}{e^T x + f} \quad z = \dfrac{1}{e^T x + f}$

$$
\begin{array}{ll}
\text{minimize} & f_0(x) \\
\text{subject to} & Gx \preceq h \\
& Ax = b
\end{array}
$$

$$f_0(x) = \frac{c^T x + d}{e^T x + f}, \qquad \mathbf{dom}\, f_0(x) = \{x \mid e^T x + f > 0\}$$

-
  - x

$$Gx \preceq h$$
$$Ax = b$$
$$e^T x + f > 0$$

$$y = \frac{x}{e^T x + f} \quad z = \frac{1}{e^T x + f}$$

$$\begin{array}{ll} \text{minimize} & f_0(x) \\ \text{subject to} & Gx \preceq h \\ & Ax = b \end{array}$$

$$f_0(x) = \frac{c^T x + d}{e^T x + f}, \qquad \mathbf{dom}\, f_0(x) = \{x \mid e^T x + f > 0\}$$

-
  - x

$$Gx \preceq h$$
$$Ax = b$$
$$e^T x + f > 0$$

$$y = \frac{x}{e^T x + f} \quad z = \frac{1}{e^T x + f}$$

-
  - x

$$Gx \preceq h$$
$$Ax = b$$
$$e^T x + f > 0$$

$$y = \frac{x}{e^T x + f} \quad z = \frac{1}{e^T x + f}$$

$$\begin{array}{ll} \text{minimize} & c^T y + dz \\ \text{subject to} & Gy \preceq hz \\ & Ay = bz \\ & e^T y + fz = 1 \\ & z \geq 0 \end{array}$$

-

  - x

$$Gx \preceq h$$
$$Ax = b$$
$$e^T x + f > 0$$

$$y = \frac{x}{e^T x + f} \quad z = \frac{1}{e^T x + f}$$

$$[illegible] = \frac{[illegible]}{[illegible] + f} \leq 0$$

$$\begin{array}{ll} \text{minimize} & c^T y + dz \\ \text{subject to} & Gy \preceq hz \\ & Ay = bz \\ & e^T y + fz = 1 \\ & z \geq 0 \end{array}$$

-

  - x

$$Gx \preceq h$$
$$Ax = b$$
$$e^T x + f > 0$$

$$y = \frac{x}{e^T x + f} \quad z = \frac{1}{e^T x + f}$$

$$\frac{Gx}{e^T x + f} \preceq 0$$
$$\frac{Ax - b}{e^T x + f} = 0$$
$$\frac{e^T x + f}{e^T x + f} = 1$$

$$\begin{array}{ll} \text{minimize} & c^T y + dz \\ \text{subject to} & Gy \preceq hz \\ & Ay = bz \\ & e^T y + fz = 1 \\ & z \geq 0 \end{array}$$

-

  - x

$$Gx \preceq h$$
$$Ax = b$$
$$e^T x + f > 0$$

$$y = \frac{x}{e^T x + f} \quad z = \frac{1}{e^T x + f}$$

$$\frac{Gx - h}{e^T x + f} \le 0$$

$$\frac{Ax - b}{e^T x + f} = 0$$

$$\frac{e^T x + f}{e^T x + f} = 1$$

$$z \ge 0$$

$$\begin{array}{ll} \text{minimize} & c^T y + dz \\ \text{subject to} & Gy \preceq hz \\ & Ay = bz \\ & e^T y + fz = 1 \\ & z \ge 0 \end{array}$$

- $y \quad z$

- $y \quad z$
- $> 0 \qquad = /$

- $y \quad z$
- $> 0 \qquad = /$
  - x

- y z
- $y > 0$ $y = -y$
  - x
- $y = 0$ x

- y z
- $y > 0$ $y = z/y$
  - x
- $y = 0$ x
  - $x=x_0+ty(t \geq 0)$

- y z
- $z > 0$ $y = z/z$
  - x
- $z = 0$ x
  - $x = x_0 + ty \ (t \geq 0)$

$$
\begin{array}{ll}
\text{minimize} & c^T y + dz \\
\text{subject to} & Gy \preceq hz \\
& Ay = bz \\
& e^T y + fz = 1 \\
& z \geq 0
\end{array}
$$

- y z
- $y > 0$ $y = x/y$
  - x
- $y = 0$ x
  - $x = x_0 + ty \ (t \geq 0)$
  - $Gy \leq 0$ $Ay = 0$ $e^T y = 1$

$$
\begin{array}{ll}
\text{minimize} & c^T y + dz \\
\text{subject to} & Gy \preceq hz \\
& Ay = bz \\
& e^T y + fz = 1 \\
& z \geq 0
\end{array}
$$

- y z
- $y > 0$ $y = z/y$
  - x
- $y = 0$ x
  - $x=x_0+ty(t \geq 0)$
  - $Gy \leq 0$ $Ay=0$ $e^Ty=1$

- y z
- $y > 0$ $y = cy$
  - x
- $y = 0$ x
  - $x = x_0 + ty \ (t \geq 0)$
  - $Gy \leq 0$ $Ay = 0$ $e^T y = 1$

$$\begin{array}{ll} \text{minimize} & f_0(x) \\ \text{subject to} & Gx \preceq h \\ & Ax = b \end{array}$$

$$f_0(x) = \frac{c^T x + d}{e^T x + f}, \qquad \mathbf{dom}\, f_0(x) = \{x \mid e^T x + f > 0\}$$

- y z
- $y > 0$ $y = cy$
  - x
- $y = 0$ x
  - $x=x_0+ty(t \geq 0)$
  - $Gy \leq 0$ $Ay=0$ $e^Ty=1$
    - $Gx=Gx_0+tGy \leq h$

$$\begin{array}{ll} \text{minimize} & f_0(x) \\ \text{subject to} & Gx \preceq h \\ & Ax = b \end{array}$$

$$f_0(x) = \frac{c^T x + d}{e^T x + f}, \qquad \mathbf{dom}\, f_0(x) = \{x \mid e^T x + f > 0\}$$

- y z
- $y > 0$ $y = cy$
  - x
- $y = 0$ x
  - $x=x_0+ty(t \geq 0)$
  - $Gy \leq 0$ $Ay=0$ $e^Ty=1$
    - $Gx=Gx_0+tGy \leq h$
    - $Ax=Ax_0+tAy=b$

$$\begin{array}{ll} \text{minimize} & f_0(x) \\ \text{subject to} & Gx \preceq h \\ & Ax = b \end{array}$$

$$f_0(x) = \frac{c^T x + d}{e^T x + f}, \qquad \mathbf{dom}\, f_0(x) = \{x \mid e^T x + f > 0\}$$

- y z
- $y > 0$ $y = cy$
  - x
- $y = 0$ x
  - $x=x_0+ty(t \geq 0)$
  - $Gy \leq 0$ $Ay=0$ $e^Ty=1$
    - $Gx=Gx_0+tGy \leq h$
    - $Ax=Ax_0+tAy=b$
    - $e^Tx+f=e^Tx_0+f+te^Ty>0$

$$\begin{array}{ll} \text{minimize} & f_0(x) \\ \text{subject to} & Gx \preceq h \\ & Ax = b \end{array}$$

$$f_0(x) = \frac{c^T x + d}{e^T x + f}, \qquad \mathbf{dom}\, f_0(x) = \{x \mid e^T x + f > 0\}$$

- y z
- $y > 0$ $y = z/y$
  - x
- $y = 0$ x
  - $x=x_0+ty(t \geq 0)$
  - $Gy \leq 0$ $Ay=0$ $e^Ty=1$
    - $Gx=Gx_0+tGy \leq h$
    - $Ax=Ax_0+tAy=b$
    - $e^Tx+f=e^Tx_0+f+te^Ty>0$

- y z
- > 0 $= /$
  - x
- $= 0$ x
  - $x=x_0+ty(t \geq 0)$
  - $Gy \leq 0$ $Ay=0$ $e^Ty=1$
    - $Gx=Gx_0+tGy \leq h$
    - $Ax=Ax_0+tAy=b$
    - $e^Tx+f=e^Tx_0+f+te^Ty>0$
  - $f_0(x)=f_0(x_0+ty)=\frac{\quad_0 + \quad + }{\quad_0 + \quad + f}$

- y z
- > 0 $= /$
  - x
- $= 0$ x
  - $x=x_0+ty(t \geq 0)$
  - $Gy \leq 0$ $Ay=0$ $e^Ty=1$
    - $Gx=Gx_0+tGy \leq h$
    - $Ax=Ax_0+tAy=b$
    - $e^Tx+f=e^Tx_0+f+te^Ty>0$
  - $f_0(x)=f_0(x_0+ty)=\frac{\quad 0 + \quad + }{\quad 0 + \quad + f}$ $\lim_{\to \infty} f_0( ) =$

$$
\begin{array}{ll}
\text{minimize} & (1/2)x^T P x + q^T x + r \\
\text{subject to} & Gx \preceq h \\
& Ax = b
\end{array}
$$

$$
\begin{array}{ll}
\text{minimize} & (1/2)x^T P x + q^T x + r \quad P \in \mathbf{S}^n_+, \\
\text{subject to} & Gx \preceq h \\
& Ax = b
\end{array}
$$

$$
\begin{array}{ll}
\text{minimize} & (1/2)x^T P x + q^T x + r \quad P \in \mathbf{S}^n_+, \\
\text{subject to} & Gx \preceq h \\
& Ax = b
\end{array}
$$

-

$$
\begin{array}{ll}
\text{minimize} & (1/2)x^T P x + q^T x + r \quad P \in \mathbf{S}^n_+, \\
\text{subject to} & Gx \preceq h \\
& Ax = b
\end{array}
$$

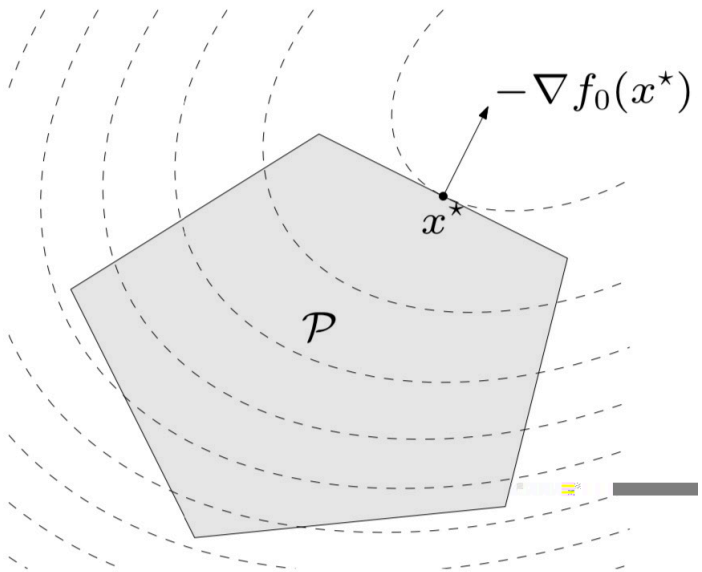

$$
\begin{array}{ll}
\text{minimize} & (1/2)x^T P_0 x + q_0^T x + r_0 \\
\text{subject to} & (1/2)x^T P_i x + q_i^T x + r_i \leq 0, \quad i = 1, \ldots, m \\
& Ax = b
\end{array}
$$

$$
\begin{array}{ll}
\text{minimize} & (1/2)x^T P_0 x + q_0^T x + r_0 \qquad P_i \in \mathbf{S}_+^n \\
\text{subject to} & (1/2)x^T P_i x + q_i^T x + r_i \leq 0, \quad i = 1, \ldots, m \\
& Ax = b
\end{array}
$$

$$
\begin{array}{ll}
\text{minimize} & (1/2)x^T P_0 x + q_0^T x + r_0 \qquad P_i \in \mathbf{S}_+^n \\
\text{subject to} & (1/2)x^T P_i x + q_i^T x + r_i \leq 0, \quad i = 1, \ldots, m \\
& Ax = b
\end{array}
$$

- $P_1, \ldots, P_m \in \mathbf{S}_{++}^n$ $\qquad m$

$$
\begin{array}{ll}
\text{minimize} & (1/2)x^T P_0 x + q_0^T x + r_0 \qquad P_i \in \mathbf{S}_+^n \\
\text{subject to} & (1/2)x^T P_i x + q_i^T x + r_i \le 0, \quad i = 1, \ldots, m \\
& Ax = b
\end{array}
$$

- $P_1, \ldots, P_m \in \mathbf{S}_{++}^n$ $\qquad m$

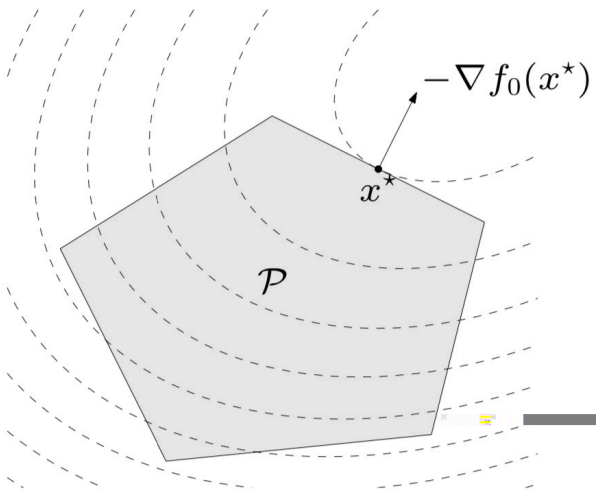

$$
\begin{array}{ll}
\text{minimize} & (1/2)x^T P_0 x + q_0^T x + r_0 \qquad P_i \in \mathbf{S}_+^n \\
\text{subject to} & (1/2)x^T P_i x + q_i^T x + r_i \leq 0, \quad i = 1, \ldots, m \\
& Ax = b
\end{array}
$$

- $P_1, \ldots, P_m \in \mathbf{S}_{++}^n$ $\qquad m$

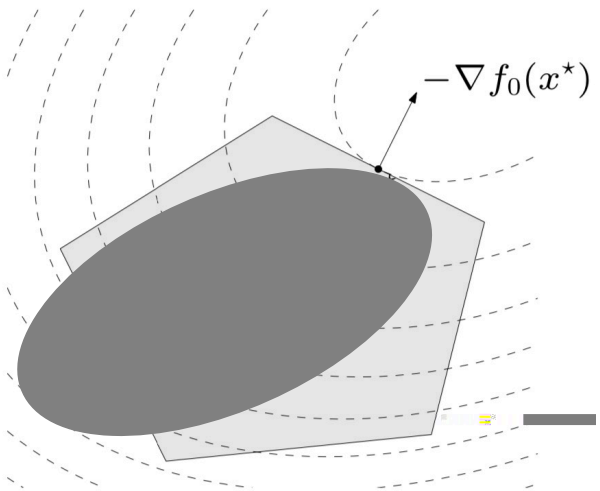

-

-
  - $b = \quad + $

- $\boldsymbol{b} = \quad \boldsymbol{x} \quad +$
- $\boldsymbol{x}^* = \arg\min_{\boldsymbol{x}} \|\boldsymbol{b} - \quad \boldsymbol{x}\|_2$

- $\boldsymbol{b} = \quad \boldsymbol{x} \quad +$
- $\boldsymbol{x}^* = \arg\min_{\boldsymbol{x}} \|\boldsymbol{b} - \quad \boldsymbol{x}\|_2$
- $\quad = \arg\min_{\boldsymbol{x}} \|\boldsymbol{b} - \quad \boldsymbol{x}\|_2^2$

- $\mathbf{b} = \mathbf{A}\mathbf{x} +$
- $\mathbf{x}^* = \arg\min_{\mathbf{x}} \|\mathbf{b} - \mathbf{A}\mathbf{x}\|_2$
- $= \arg\min_{\mathbf{x}} \|\mathbf{b} - \mathbf{A}\mathbf{x}\|_2^2$
- $= \arg\min_{\mathbf{x}} \mathbf{x}^T \mathbf{A}^T \mathbf{A}\mathbf{x} - 2\mathbf{b}^T \mathbf{A}\mathbf{x} + \mathbf{b}^T \mathbf{b}$
- $= (\mathbf{A}^T \mathbf{A})^{-1} \mathbf{A}^T \mathbf{b}$

-

-

❖ $b = \quad y + b \qquad x$

- $\boldsymbol{b} = \quad \boldsymbol{y} + \boldsymbol{b} \qquad x$
- $\boldsymbol{y}^* = \arg\min_{\boldsymbol{y}} \|\boldsymbol{b} - \quad \boldsymbol{y}\|_2^2 + \lambda_0 \|\boldsymbol{y}\|_0$

- $\boldsymbol{b} = \quad \boldsymbol{y} + \boldsymbol{b} \qquad x$
- $\boldsymbol{y}^* = \arg\min_{\boldsymbol{y}} \|\boldsymbol{b} - \quad \boldsymbol{y}\|_2^2 + \lambda_0 \|\boldsymbol{y}\|_0$
- $\qquad \approx \arg\min_{\boldsymbol{y}} \|\boldsymbol{b} - \quad \boldsymbol{y}\|_2^2 + \lambda_1 \|\boldsymbol{y}\|_1$

- $b = \quad + b \qquad x$
- $\quad * = \arg\min \| b - \quad \|_2^2 + \lambda_0 \| \quad \|_0$
- $\qquad \approx \arg\min \| b - \quad \|_2^2 + \lambda_1 \| \quad \|_1$
- L

- $b = \quad + b \qquad x$
- $\quad * = \arg\min \quad n - \quad n \quad \lambda_{0n} \quad r$

- $\boldsymbol{b} = \quad \boldsymbol{\beta} + \boldsymbol{b} \qquad x$
- $\boldsymbol{\beta}^* = \arg\min_{\boldsymbol{\beta}} \|\boldsymbol{b} - \quad \boldsymbol{\beta}\|_2^2 + \lambda_0 \|\boldsymbol{\beta}\|_0$
- $\approx \arg\min_{\boldsymbol{\beta}} \|\boldsymbol{b} - \quad \boldsymbol{\beta}\|_2^2 + \lambda_1 \|\boldsymbol{\beta}\|_1$
- L
- $\boldsymbol{\beta} = \boldsymbol{\beta}^+ - \boldsymbol{\beta}^-, \boldsymbol{\beta}^+, \boldsymbol{\beta}^- \geq 0$
- $= \arg\min_{\boldsymbol{\beta}^+, \boldsymbol{\beta}^-} \|\boldsymbol{b} - \quad \boldsymbol{\beta}^+ + \quad \boldsymbol{\beta}^-\|_2^2 + \lambda_1 \|\boldsymbol{\beta}^+ - \boldsymbol{\beta}^-\|_1$

- $\boldsymbol{b} = \quad \boldsymbol{\varepsilon} + \boldsymbol{b} \qquad x$
- $\boldsymbol{\varepsilon}^* = \arg\min_{\boldsymbol{\varepsilon}} \|\boldsymbol{b} - \quad \boldsymbol{\varepsilon}\|_2^2 + \lambda_0 \|\boldsymbol{\varepsilon}\|_0$
- $\approx \arg\min_{\boldsymbol{\varepsilon}} \|\boldsymbol{b} - \quad \boldsymbol{\varepsilon}\|_2^2 + \lambda_1 \|\boldsymbol{\varepsilon}\|_1$
- L
- $\boldsymbol{\varepsilon} = \boldsymbol{\varepsilon}^+ - \boldsymbol{\varepsilon}^-, \boldsymbol{\varepsilon}^+, \boldsymbol{\varepsilon}^- \geq 0$
- $= \arg\min_{\boldsymbol{\varepsilon}^+, \boldsymbol{\varepsilon}^-} \|\boldsymbol{b} - \quad \boldsymbol{\varepsilon}^+ + \quad \boldsymbol{\varepsilon}^-\|_2^2 + \lambda_1 \|\boldsymbol{\varepsilon}^+ - \boldsymbol{\varepsilon}^-\|_1$
- $= \arg\min_{\boldsymbol{\varepsilon}^+, \boldsymbol{\varepsilon}^-} \|\boldsymbol{b} - \quad \boldsymbol{\varepsilon}^+ + \quad \boldsymbol{\varepsilon}^-\|_2^2 + \lambda_1 1^T \boldsymbol{\varepsilon}^+ + \lambda_1 1^T \boldsymbol{\varepsilon}^-$

- L_2- ( )

- L_2- ( )
  - x

- L_2- ( )
  - x
  - $x^* = \arg\min_x \|b - Ax\|_2^2 + \lambda_2 \|x\|_2^2$

- L_2- ( )
  - x
  - $* = \arg\min \|b - \|_2^2 + \lambda_2 \|\|_2^2$
  - $+ \lambda_2$

- L_2- ( )
  - x
  - $* = \arg\min \|b - \|_2^2 + \lambda_2 \| \|_2^2$
  - $+ \lambda_2$
  - $\arg\min \|b - \|_2^2$

- L_2- ( )
  - x
  - $\ast = \arg\min \|b - \ \|_2^2 + \lambda_2 \| \|_2^2$
  - $+ \lambda_2$
  - $\arg\min \|b - \ \|_2^2$

    $\| \|_2^2 \leq \theta$

- 投资组合问题

投资组合问题

	投入	回报
	X_1	P_1X_1
	X_2	P_2X_2
	…	…
	X_n	P_nX_n

投资组合问题

	投入	回报
	X_1	P_1X_1
	X_2	P_2X_2
	…	…
	X_n	P_nX_n

max $_1$ $_1$ + . . . + $_1$ + . . . + $_1$ ≤ $_1$, . . . , $_1$ ≥ 0

例

例

- 投资组合问题

例

- 投资组合问题
- $= [1.1 \quad 1.2 \quad 1.0]$
- $\Sigma = \begin{bmatrix} 1.5 & 0 & 0 \\ 0 & 2.0 & 0 \\ 0 & 0 & 1.0 \end{bmatrix}$

例

- 投资组合问题
- $= [1.1 \quad 1.2 \quad 1.0]$
- $\Sigma = \begin{bmatrix} 1.5 & 0 & 0 \\ 0 & 2.0 & 0 \\ 0 & 0 & 1.0 \end{bmatrix}$

$\min$ [illegible]

[illegible]

- [illegible] 1 [illegible]

[illegible] ≥ 0

-

-

$$
\begin{array}{ll}
\text{minimize} & f_0(x) \\
\text{subject to} & f_i(x) \preceq_{K_i} 0, \quad i = 1, \ldots, m \\
& Ax = b
\end{array}
$$

- $$\begin{array}{ll} \text{minimize} & f_0(x) \\ \text{subject to} & f_i(x) \preceq_{K_i} 0, \quad i = 1, \ldots, m \\ & Ax = b \end{array}$$

- $f_0 : \mathbf{R}^n \to \mathbf{R}$ $\qquad f_i : \mathbf{R}^n \to \mathbf{R}^{k_i}$ $\qquad K_i$

-

$$\begin{array}{ll} \text{minimize} & f_0(x) \\ \text{subject to} & f_i(x) \preceq_{K_i} 0, \quad i = 1, \ldots, m \\ & Ax = b \end{array}$$

- $f_0 : \mathbf{R}^n \to \mathbf{R}$ $\qquad f_i : \mathbf{R}^n \to \mathbf{R}^{k_i}$ $\qquad K_i$
-

-

$$\begin{array}{ll} \text{minimize} & f_0(x) \\ \text{subject to} & f_i(x) \preceq_{K_i} 0, \quad i = 1, \ldots, m \\ & Ax = b \end{array}$$

- $f_0 : \mathbf{R}^n \to \mathbf{R}$ $\qquad f_i : \mathbf{R}^n \to \mathbf{R}^{k_i}$ $\qquad K_i$
-
-

- $$\begin{array}{ll} \text{minimize} & f_0(x) \\ \text{subject to} & f_i(x) \preceq_{K_i} 0, \quad i = 1, \ldots, m \\ & Ax = b \end{array}$$

- $f_0 : \mathbf{R}^n \to \mathbf{R}$ $\qquad f_i : \mathbf{R}^n \to \mathbf{R}^{k_i}$ $\qquad K_i$

-

- $$\begin{array}{ll} \text{minimize} & c^T x \\ \text{subject to} & Fx + g \preceq_K 0 \\ & Ax = b \end{array}$$

-

$$\begin{array}{ll} \text{minimize} & f_0(x) \\ \text{subject to} & f_i(x) \preceq_{K_i} 0, \quad i = 1, \ldots, m \\ & Ax = b \end{array}$$

- $f_0 : \mathbf{R}^n \to \mathbf{R}$ $\qquad f_i : \mathbf{R}^n \to \mathbf{R}^{k_i}$ $\qquad K_i$
-
-

$$\begin{array}{ll} \text{minimize} & c^T x \\ \text{subject to} & Fx + g \preceq_K 0 \\ & Ax = b \end{array}$$

  -

$$
\begin{array}{ll}
\text{minimize} & c^T x \\
\text{subject to} & x_1 F_1 + x_2 F_2 + \cdots + x_n F_n + G \preceq 0 \\
& Ax = b
\end{array}
$$

$$
\begin{array}{ll}
\text{minimize} & c^T x \\
\text{subject to} & x_1 F_1 + x_2 F_2 + \cdots + x_n F_n + G \preceq 0 \\
& Ax = b
\end{array}
$$

- $F_i,\ G \in \mathbf{S}^k$

$$
\begin{array}{ll}
\text{minimize} & c^T x \\
\text{subject to} & x_1 F_1 + x_2 F_2 + \cdots + x_n F_n + G \preceq 0 \\
& Ax = b
\end{array}
$$

- $F_i,\ G \in \mathbf{S}^k$
-

$$
\begin{array}{ll}
\text{minimize} & c^T x \\
\text{subject to} & x_1 F_1 + x_2 F_2 + \cdots + x_n F_n + G \preceq 0 \\
& Ax = b
\end{array}
$$

- $F_i,\ G \in \mathbf{S}^k$
-
-

$$
\begin{array}{ll}
\text{minimize} & c^T x \\
\text{subject to} & x_1 F_1 + x_2 F_2 + \cdots + x_n F_n + G \preceq 0 \\
& Ax = b
\end{array}
$$

- $F_i,\ G \in \mathbf{S}^k$
-
-

$$x_1 \hat{F}_1 + \cdots + x_n \hat{F}_n + \hat{G} \preceq 0, \qquad x_1 \tilde{F}_1 + \cdots + x_n \tilde{F}_n + \tilde{G} \preceq 0$$

$$
\begin{array}{ll}
\text{minimize} & c^T x \\
\text{subject to} & x_1 F_1 + x_2 F_2 + \cdots + x_n F_n + G \preceq 0 \\
& Ax = b
\end{array}
$$

- $F_i,\ G \in \mathbf{S}^k$
-
-

$$x_1 \hat{F}_1 + \cdots + x_n \hat{F}_n + \hat{G} \preceq 0, \qquad x_1 \tilde{F}_1 + \cdots + x_n \tilde{F}_n + \tilde{G} \preceq 0$$

-

$$
\begin{array}{ll}
\text{minimize} & c^T x \\
\text{subject to} & x_1 F_1 + x_2 F_2 + \cdots + x_n F_n + G \preceq 0 \\
& Ax = b
\end{array}
$$

- $F_i,\ G \in \mathbf{S}^k$
-
-

$$x_1 \hat{F}_1 + \cdots + x_n \hat{F}_n + \hat{G} \preceq 0, \qquad x_1 \tilde{F}_1 + \cdots + x_n \tilde{F}_n + \tilde{G} \preceq 0$$

-

$$x_1 \begin{bmatrix} \hat{F}_1 & 0 \\ 0 & \tilde{F}_1 \end{bmatrix} + x_2 \begin{bmatrix} \hat{F}_2 & 0 \\ 0 & \tilde{F}_2 \end{bmatrix} + \cdots + x_n \begin{bmatrix} \hat{F}_n & 0 \\ 0 & \tilde{F}_n \end{bmatrix} + \begin{bmatrix} \hat{G} & 0 \\ 0 & \tilde{G} \end{bmatrix} \preceq 0$$

半定规划

半定规划

$$
\begin{array}{ll}
\text{minimize} & \mathbf{tr}(CX) \\
\text{subject to} & \mathbf{tr}(A_i X) = b_i, \quad i = 1, \ldots, p \\
& X \succeq 0,
\end{array}
$$

半定规划

$$
\begin{array}{ll}
\text{minimize} & \mathbf{tr}(CX) \\
\text{subject to} & \mathbf{tr}(A_i X) = b_i, \quad i = 1, \ldots, p \\
& X \succeq 0,
\end{array}
$$

- 例：

$$
\begin{array}{ll}
\text{minimize} & x_1 + x_2 \\
\text{subject to} & x_1 \begin{bmatrix} 1 & 0 \\ 0 & 1 \end{bmatrix} + x_2 \begin{bmatrix} 0 & 1 \\ 1 & 0 \end{bmatrix} \succeq \begin{bmatrix} 1 & 0 \\ 0 & 1 \end{bmatrix}
\end{array}
$$

半定规划

$$
\begin{array}{ll}
\text{minimize} & \mathbf{tr}(CX) \\
\text{subject to} & \mathbf{tr}(A_i X) = b_i, \quad i = 1, \ldots, p \\
& X \succeq 0,
\end{array}
$$

- 例：$F(x) = F_0 + x_1 F_1 + \ldots + x_n F_n$
  - $F(x) \succeq 0$, $x = 0, \ldots, x_n$
  - 谱范数 $\|F(x)\|_2 = F(x)$ 的最大奇异值

半定规划

$$
\begin{array}{ll}
\text{minimize} & \mathbf{tr}(CX) \\
\text{subject to} & \mathbf{tr}(A_i X) = b_i, \quad i = 1, \ldots, p \\
& X \succeq 0,
\end{array}
$$

- 例：$F(x) = F_0 + x_1 F_1 + \ldots + x_n F_n$
  - $F(x) \succeq 0$, $x = 0, \ldots, x_n$
  - 谱范数 $\|F(x)\|_2 = F(x)$ 的最大奇异值
  - min $\|F(x)\|_2$

半定规划

$$
\begin{array}{ll}
\text{minimize} & \mathbf{tr}(CX) \\
\text{subject to} & \mathbf{tr}(A_i X) = b_i, \quad i = 1, \ldots, p \\
& X \succeq 0,
\end{array}
$$

- 例: [illegible] $= [illegible]_0 + [illegible]_1 [illegible]_1 + \ldots + [illegible]$
  - [illegible] $p^* \sigma$, [illegible] $= 0, \ldots,$ [illegible]
  - 谱范数 [illegible] $= [illegible]$ 的最大奇异值
  - min [illegible]
  - [illegible] $\leq \sqrt{[illegible]}$ [illegible] ≤ 0

半定规划

半定规划

- min $\sqrt{\ }$; 等价于min

半定规划

- min $\sqrt{\ }$; 等价于min
  . . . ((≤
- 令$\sqrt{\ }$ = ，则等价于

半定规划

- min $\sqrt{\ }$; $\ldots$ ($\ldots$ ($\ldots$ ≤ $\ldots$ 等价于min $\ldots$
- 令$\sqrt{\ }$ = ，则等价于 min $\ldots$;
- $\ldots$ ($\ldots$ ($\ldots$ − $\ldots$ ≤ 0等价于 $\ldots$ ≥ 0

半定规划

- min $\sqrt{\ }$ ，
  . . . ( ) . ( ) ≤ 等价于min
- 令$\sqrt{\ }$ = ，则等价于
  min ，
- . . . ( ) . ( ) − 2 ≤ 0等价于
  ≥ 0
  min ，
- . . . [， ( ) ，] ≥ 0

$$
\begin{array}{ll}
\text{minimize} & f^T x \qquad (A_i \in \mathbf{R}^{n_i \times n},\ F \in \mathbf{R}^{p \times n}) \\
\text{subject to} & \|A_i x + b_i\|_2 \leq c_i^T x + d_i, \quad i = 1, \ldots, m \\
& Fx = g
\end{array}
$$

$$
\begin{array}{ll}
\text{minimize} & f^T x \qquad (A_i \in \mathbf{R}^{n_i \times n},\ F \in \mathbf{R}^{p \times n}) \\
\text{subject to} & \|A_i x + b_i\|_2 \le c_i^T x + d_i, \quad i = 1, \ldots, m \\
& Fx = g
\end{array}
$$

- $(A_i x + b_i, c_i^T x + d_i) \in$ second-order cone in $\mathbf{R}^{n_i+1}$

$$
\begin{array}{ll}
\text{minimize} & f^T x \qquad (A_i \in \mathbf{R}^{n_i \times n},\ F \in \mathbf{R}^{p \times n}) \\
\text{subject to} & \|A_i x + b_i\|_2 \le c_i^T x + d_i, \quad i = 1, \ldots, m \\
& Fx = g
\end{array}
$$

- $(A_i x + b_i, c_i^T x + d_i) \in$ second-order cone in $\mathbf{R}^{n_i+1}$
- n_i

$$
\begin{array}{ll}
\text{minimize} & f^T x \qquad (A_i \in \mathbf{R}^{n_i \times n},\ F \in \mathbf{R}^{p \times n}) \\
\text{subject to} & \|A_i x + b_i\|_2 \le c_i^T x + d_i, \quad i = 1, \ldots, m \\
& Fx = g
\end{array}
$$

- $(A_i x + b_i, c_i^T x + d_i) \in$ second-order cone in $\mathbf{R}^{n_i+1}$
- n_i
- c_i

$$
\begin{array}{ll}
\text{minimize} & f^T x \qquad (A_i \in \mathbf{R}^{n_i \times n},\ F \in \mathbf{R}^{p \times n}) \\
\text{subject to} & \|A_i x + b_i\|_2 \le c_i^T x + d_i, \quad i = 1, \ldots, m \\
& Fx = g
\end{array}
$$

- $(A_i x + b_i, c_i^T x + d_i) \in$ second-order cone in $\mathbf{R}^{n_i+1}$
- n_i
- c_i

-

-

LP: minimize $c^T x$
subject to $Ax \preceq b$

SDP: minimize $c^T x$
subject to $\mathbf{diag}(Ax - b) \preceq 0$

-

LP: minimize $c^T x$
subject to $Ax \preceq b$

SDP: minimize $c^T x$
subject to $\mathbf{diag}(Ax - b) \preceq 0$

-

-

LP: minimize $c^T x$
subject to $Ax \preceq b$

SDP: minimize $c^T x$
subject to $\mathbf{diag}(Ax - b) \preceq 0$

-

SOCP: minimize $f^T x$
subject to $\|A_i x + b_i\|_2 \leq c_i^T x + d_i, \quad i = 1, \ldots, m$

SDP: minimize $f^T x$
subject to $\begin{bmatrix} (c_i^T x + d_i) I & A_i x + b_i \\ (A_i x + b_i)^T & c_i^T x + d_i \end{bmatrix} \succeq 0, \quad i = 1, \ldots, m$

-

-

$$
\begin{array}{ll}
\text{minimize (w.r.t. } K) & f_0(x) \\
\text{subject to} & f_i(x) \leq 0, \quad i = 1, \ldots, m \\
 & h_i(x) = 0, \quad i = 1, \ldots, p
\end{array}
$$

-

$$\begin{array}{ll} \text{minimize (w.r.t. } K) & f_0(x) \\ \text{subject to} & f_i(x) \leq 0, \quad i = 1, \ldots, m \\ & h_i(x) = 0, \quad i = 1, \ldots, p \end{array}$$

- $$f_0 : \mathbf{R}^n \to \mathbf{R}^q$$

-

$$\begin{array}{ll} \text{minimize (w.r.t. } K) & f_0(x) \\ \text{subject to} & f_i(x) \leq 0, \quad i = 1, \ldots, m \\ & h_i(x) = 0, \quad i = 1, \ldots, p \end{array}$$

- $$f_0 : \mathbf{R}^n \to \mathbf{R}^q$$
-

-

$$\begin{array}{ll} \text{minimize (w.r.t. } K) & f_0(x) \\ \text{subject to} & f_i(x) \leq 0, \quad i = 1, \ldots, m \\ & h_i(x) = 0, \quad i = 1, \ldots, p \end{array}$$

- $$f_0 : \mathbf{R}^n \to \mathbf{R}^q$$

-

$$\begin{array}{ll} \text{minimize (w.r.t. } K) & f_0(x), \\ \text{subject to} & f_i(x) \leq 0, \quad i = 1, \ldots, m \\ & Ax = b \end{array}$$

-

$$\begin{array}{ll} \text{minimize (w.r.t. } K) & f_0(x) \\ \text{subject to} & f_i(x) \leq 0, \quad i = 1, \ldots, m \\ & h_i(x) = 0, \quad i = 1, \ldots, p \end{array}$$

- $$f_0 : \mathbf{R}^n \to \mathbf{R}^q$$

-

$$\begin{array}{ll} \text{minimize (w.r.t. } K) & f_0(x), \\ \text{subject to} & f_i(x) \leq 0, \quad i = 1, \ldots, m \\ & Ax = b \end{array}$$

- f K $f_1, \ldots, f_m$

-

- $$\mathcal{O} = \{ f_0(x) \mid x \text{ feasible} \}$$

- $$\mathcal{O} = \{ f_0(x) \mid x \text{ feasible} \}$$
- x $f_0(x)$ $\mathcal{O}$

- $$\mathcal{O} = \{f_0(x) \mid x \text{ feasible}\}$$
- x $f_0(x)$ $\mathcal{O}$
- x $f_0(x)$ $\mathcal{O}$

-

$$\mathcal{O} = \{f_0(x) \mid x \text{ feasible}\}$$

- x $f_0(x)$ $\mathcal{O}$
- x $f_0(x)$ $\mathcal{O}$

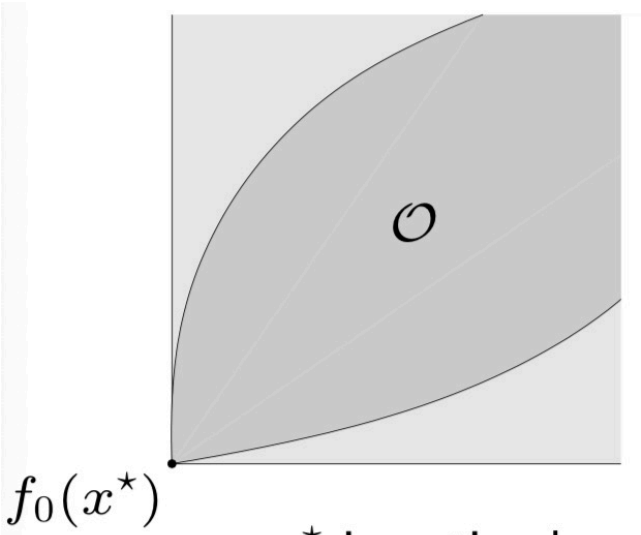

$x^\star$ is optimal

-

$$\mathcal{O} = \{ f_0(x) \mid x \text{ feasible} \}$$

- x $f_0(x)$ $\mathcal{O}$
- x $f_0(x)$ $\mathcal{O}$

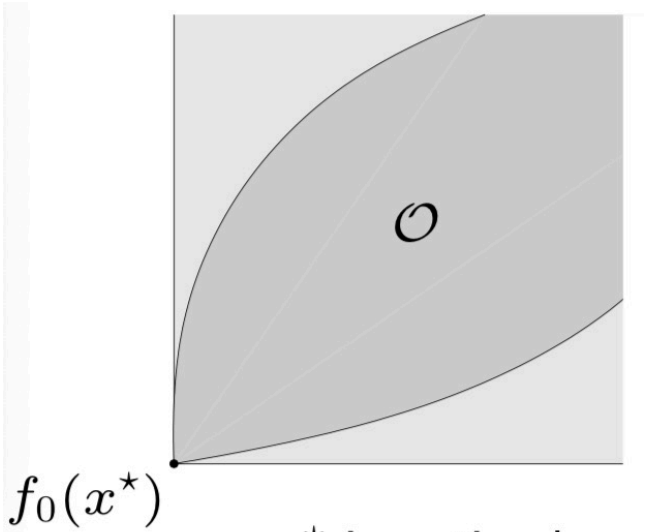

$x^\star$ is optimal

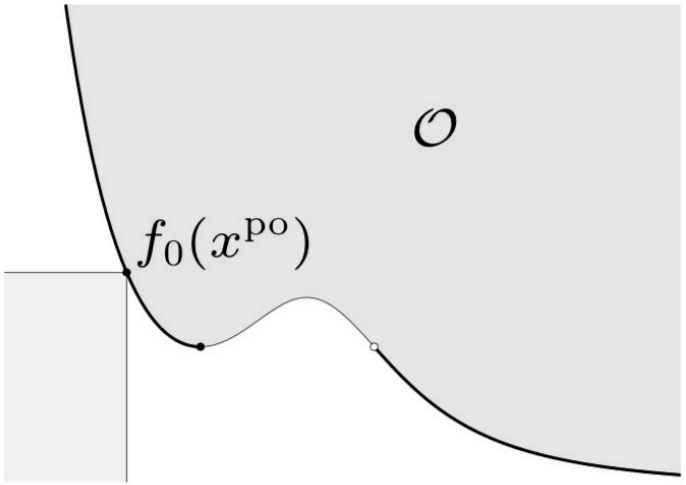

x^{po} is Pareto optimal

- $\lambda \succ_{K^*} 0$

- $$\lambda \succ_{K^*} 0$$

$$\begin{array}{ll} \text{minimize} & \lambda^T f_0(x) \\ \text{subject to} & f_i(x) \leq 0, \quad i = 1, \ldots, m \\ & h_i(x) = 0, \quad i = 1, \ldots, p \end{array}$$

- $$\lambda \succ_{K^*} 0$$

$$\begin{array}{ll} \text{minimize} & \lambda^T f_0(x) \\ \text{subject to} & f_i(x) \leq 0, \quad i = 1, \ldots, m \\ & h_i(x) = 0, \quad i = 1, \ldots, p \end{array}$$

- $$\lambda \succ_{K^*} 0$$

minimize (w.r.t. $\mathbf{R}^2_+$) $\quad (\|Ax-b\|_2^2, \|x\|_2^2)$

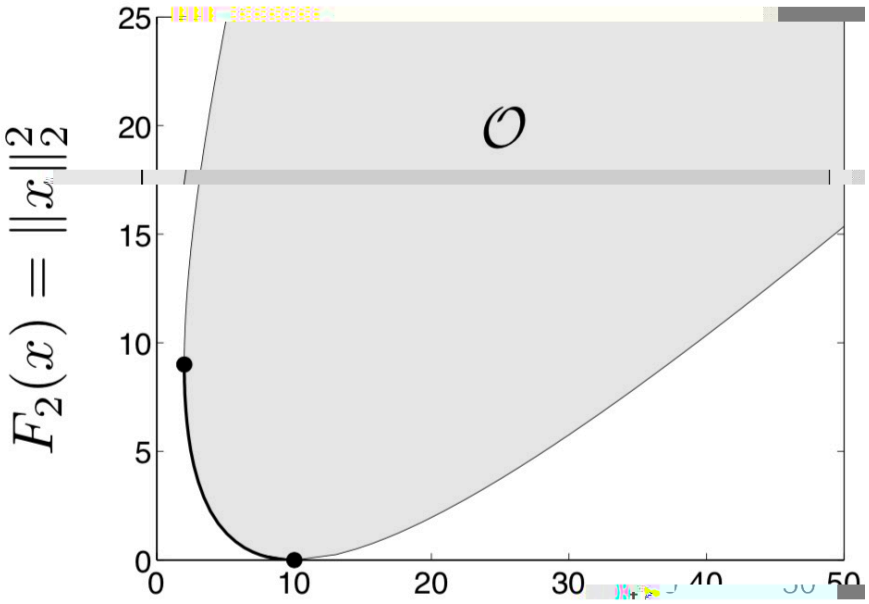

minimize (w.r.t. $\mathbf{R}^2_+$) $\quad (\|Ax-b\|_2^2, \|x\|_2^2)$

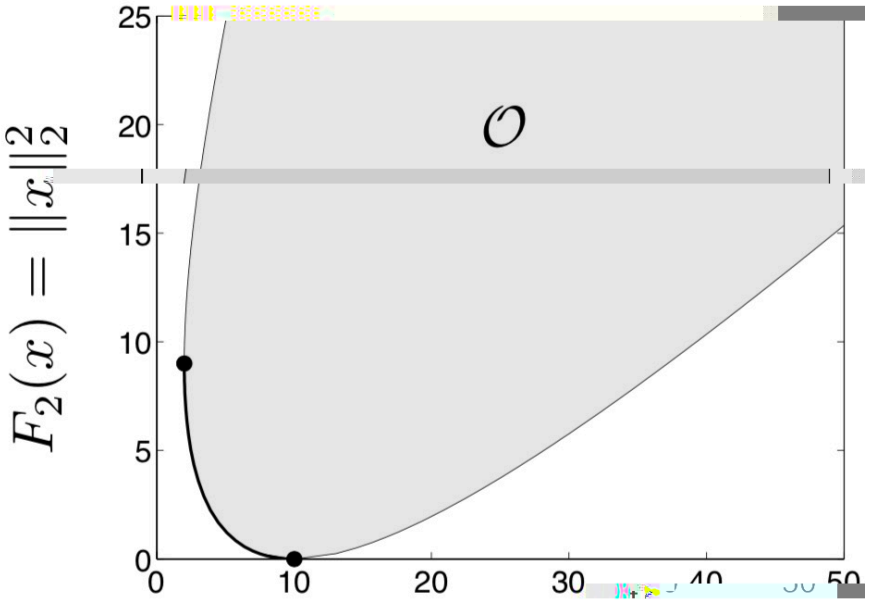

- $A \in \mathbf{R}^{100\times 10}$